City of Bellaire

BUILDING & STANDARDS COMMISSION
Wednesday, October 28, 2020

Telephonic Meeting	Regular Session	7:00 PM

LOCAL DIAL-IN NUMBER:
346-248-7799

TOLL-FREE DIAL-IN NUMBER:
1-888-550-8563

Meeting ID:
813 4492 5390

Agenda

Chair

Dan R. Collins

Vice Chair	Commissioner	Commissioner
Danny Spencer	Lee Hampton	George Williams
Commissioner	**Commissioner**	**Commissioner**
Stephen Redding	Christina Stone	Paul Coselli

REGULAR SESSION - 7:00 P.M.

NOTICE OF TELEPHONIC MEETING

Pursuant to Section 418.016 of the Texas Government Code, on March 16, 2020, the Governor of the State of Texas granted the Office of the Attorney General's request for the temporary suspension of certain provisions of the Texas Open Meetings Act to allow for telephonic or videoconference meetings of governmental bodies that are accessible to the public in an effort to reduce in-person meetings that assemble large groups of people, as a precautionary measure to contain the spread of novel coronavirus COVID-19.

Accordingly, this Regular Session of the Building and Standards Commission of the City of Bellaire, Texas, will be conducted telephonically in furtherance of this important and necessary objective to protect the public health and welfare in our community.

Members of the public will be entitled to participate and address the Building and Standards Commission in the telephonic meeting at the time for general comments. Any person desiring to address the Commission must submit their request via e-mail to Marleny Campos at mcampos@bellairetx.gov. The request must be received prior to the start of the meeting and include the speaker's full name and the phone number from which they will be calling in to participate in the meeting. Speakers will be recognized during the comment period in the order their requests are received.

Members of the public may view a live broadcast of the meeting by visiting the City's website: https://bellairetx.new.swagit.com/views/21, U-Verse Channel 99, Comcast Channel 16, and the City's Facebook page at https://www.facebook.com/bellairetx.gov.

The local dial-in number to participate remotely in the telephonic meeting is 346-248-7799, and the toll-free number is 1-888-550-8563. The Meeting ID is 813 4492 5390.

An electronic copy of the agenda packet for this Regular Session is posted online at https://bellairetx.civicweb.net/Portal/MeetingInformation.aspx?type=28.

A recording of the telephonic meeting will be made and will be posted online at https://bellairetx.civicweb.net/Portal/MeetingInformation.aspx?type=28.

A. Call to Order

B. Announcement of a Quorum

C. Rules for Public Comment

1. Sign up forms will be available at all Regular and Special meetings for registering the names of members of the Public who wish to either: i) speak on an agenda item, provided such items have not been the subject of a prior public hearing; or ii) make a general comment related to the Commission business. These forms will be given to the Secretary prior to the start of the meeting so that the person's name can be called to address the Commission at the appropriate time.

2. Public Comments on agenda items will be made at the time an agenda item appears in the Order of Business and before the Commission's consideration of that item.

3. Public Comments of a general nature shall be made at the time designated by the Order of Business.

4. All public comments shall be limited to six (6) minutes per speaker with extensions of two (2) minute increments as approved by a majority vote of Commission members present.

5. Public Comment at Workshop meetings will be allowed at the discretion of the Chair. Any comments will be limited as described in Article IV Sec 8.

D. Approval or Correction of the Minutes

E. Public Comment

F. Report from the Building Official

G. Reports of Committees, Communications, and Staff Other than the Building Official

1. Communications to Commission Members Outside of Posted Meetings

2. Committee Reports

3. Reports from Staff Other than the Building Official

a. Discussion and possible rescheduling of the Commission's November meeting due to the Thanksgiving holiday.

b. Discussion and possible rescheduling of the Commission's December meeting due to the Christmas Holiday.

H. City Council Liaison Report

I. Old Business

1. Discussion and possible action on proposed language to Section 9-18 to include drainage requirements for commercial construction from ARKK Engineers, and discussion on City of Houston manual.

Agenda Statement Report - Pdf

2. Discussion and possible action on changes to Chapter 9, Sec. 9-18 - Drainage requirements for residential construction, of the City of Bellaire's Code of Ordinances regarding the elevated garage heights and driveways.

Agenda Statement Report - Pdf

J. New Business

1. **Discussion and possible discussion on updates and invalid references within Chapter 9, Article II, Building Codes, to the 2018 IRC - Requested by Commissioner Redding.**

   Commissioner Redding Requests_Email1

2. **Discussion and possible action on Table R301.2(1), Climatic and Geographic Design Criteria, from the 2018 IRC - Requested by Commissioner Redding.**

   Table 301.2 Redding comments
   Commissioner Redding Requests_Email2

3. **Discussion and possible action on the request from the Planning & Zoning Commission to review crawl space enclosure materials.**

   Reference Material-1
   Reference Material-2
   Reference Material-3
   FEMA Flood Damage Resistant Materials

4. **Discussion and possible recommendation to the Planning & Zoning Commission to review front setback encroachment for front egress stairways.**

5. **Discussion and possible action on 2-foot side setback for residential driveway approaches.**

6. **Discussion and possible action on possible amendments for environmental regulations.**

   Proposed Options

7. **Discussion of regulations regarding aerial easements.**

8. **The Chair shall recognize any Commissioner who wishes to bring New Business to the attention of the Commission. Consideration of New Business shall be for the limited purpose of determining whether the matter is appropriate for inclusion on a future agenda of the Commission or referral to Staff for investigation.**

K. Public Hearings

L. Announcements and Comments by Commissioners

M. Adjournment

AGENDA STATEMENT

City of Bellaire

MEETING: Building & Standards Commission - Oct 28 2020
PREPARED BY: ChaVonne Sampson
DEPARTMENT: Development Services

ITEM TITLE:

Discussion and possible action on proposed language to Section 9-18 to include drainage requirements for commercial construction from ARKK Engineers, and discussion on City of Houston manual.

BACKGROUND/SUMMARY:

On October 22nd, 2020, Chair Collins, emailed the request on behalf of the Building and Standards Commission that the City Engineer attend the next Commission meeting on Wed. October 28 at 7:00 PM to answer questions posed by the Commissioners and make a detailed presentation on the following subject(s):

- Recommended draft ordinance language to incorporate the best practice requirements, as partially found in the City of Houston Chapter 9 Design Manual relating to storm water detention requirements for Commercial Property Developments in the City of Bellaire as currently practiced from an engineering review, plan review, plan approval, inspection requirements and inspection assurance of compliance.
- Any recommended omissions or additions to the COH Chapter 9 document relative to specific City of Bellaire ordinances, requirements or past best practices of application.
- Review of the base document, COH Chapter 9, and explanation of the calculations to determine the amount of storm water detention required.
- Review of the approved design methods of construction to achieve the required storm water detention (ex. open ditch, sub surface culverts, etc.)
- Review of data which may drive upsizing requirements of COB storm water drainage capacity relative to the introduction of required specific Commercial Development storm water detention facilities and integration options (metered pipe, valves, open flow , etc.) as well as sharing and coordination with COB Public Works for necessary accommodation and any required PW construction.
- Presentation and discussion of the application, solution and inspection to insure compliance of this best practice document Chapter 9, specifically for the following non-residential locations in COB.
    - Eye Surgery Center - Bissonnet at Newcastle
    - Soccer field - EHS - Bissonnet at Ave B
    - Parking Garage - Fournace Ave (old Chevron complex)
- Any other areas of interest or benefit for discussion and or recommendation by the City Engineer for incorporating the base ref document into the COB Code of Ordinances to achieve past success in the implementation of this best practice of requiring storm water detention in non-residential construction in the COB.

The City Engineer has reviewed the request and has asked for additional time to prepare, for November's meeting. If the Commission desires to do so, the item can be postponed or review the list and add any additional items.

CITY ATTORNEY REVIEW:

☐ **Yes** ☑ **No**

AGENDA STATEMENT

City of Bellaire

MEETING: Building & Standards Commission - Oct 28 2020
PREPARED BY: ChaVonne Sampson
DEPARTMENT: Development Services

ITEM TITLE:

Discussion and possible action on changes to Chapter 9, Sec. 9-18 - Drainage requirements for residential construction, of the City of Bellaire's Code of Ordinances regarding the elevated garage heights and driveways.

BACKGROUND/SUMMARY:

On September 23, 2020, the Building and Standards Commission discussed adding language to Chapter 9, Buildings, of the City of Bellaire's Code of Ordinances, Section 9-18, Drainage requirements for residential construction. Staff provided draft language addressing the main topic of elevated garage heights and driveways. After discussion, the Commission determined the language had too much room for interpretation. The Commission appointed a subcommittee made of Commissioner Hampton, Commissioner Redding, and Chair Collins for the purpose of reviewing and clarifying the proposed language.

The purposed code language is attached for discussion. The next steps will be to allow the City Engineer to review the change in order to ensure it is not in conflict with other sections of the ordinance.

CITY ATTORNEY REVIEW:

☐ **Yes** ☑ **No**

Chapter 9 - BUILDINGS[1]

…

Sec. 9-18. - Drainage requirements for residential construction.

(b) *Objectives of drainage plan.*

(1) Prevent stormwater from flowing onto adjacent property unless appropriate drainage easement agreement is obtained; and

(2) Control fill that may increase flood damage.

(c) *Definitions.* Unless specifically defined below, words or phrases used in this section shall be interpreted to give them the meaning they have in common usage and to give this section its most reasonable application.

(6) *No net increase* means that the volume of material placed on a lot at any time must not be greater than the amount of material removed from the lot during demolition and subsequent grading operations.

(7) *Fill credit* means the volume of material removed from the lot during demolition of an existing structure that may be imported onto the lot for construction, grading and drainage purposes. The fill credit may be determined using the chart maintained by the building official or by calculating the volume of material removed from the lot during demolition and subsequent grading operations. Any fill above the base flood elevation (BFE) will not count against the fill credit for the lot.

(8) *Pier and beam foundation construction* means the floor of the structure is elevated above the ground, supported by a number of piers and beams, such that floodwaters may rise and recede under the floor of the structure. The area under the structure should be graded such that water will not pond.

~~(9) The height to which any point on the lot, other than the foundation, may be filled is limited to an elevation calculated by multiplying the distance from the curb by one percent per foot and adding the top of curb elevation. Existing elevations which are higher than the calculated elevations are not required to be cut to meet the requirements of this section. The calculation only applies to fill above the existing elevation. The one percent does not apply to proposed interior grades or cross-slopes of swales. In no case shall any point on the lot be filled more than eight inches above the existing (pre-construction) elevations.~~

(d) *Contents of drainage plan.*

(2) *Requirement to drain.* Drainage of the lot may be obtained by surface or subsurface means, or a combination of the two, as is appropriate and necessary so that the stormwater falling on the residential lot upon which construction is planned will drain into the street, ditch or storm sewer system of the city and not onto adjacent property. However, as a minimum requirement, each lot will be required to provide drainage on each side, or in the case of a corner lot, on the sides adjoining the adjacent lots, designated to carry the two year design storm, sloping to the street, ditch, or storm sewer. Cross sectional elevation of the swale shall be shown on the drainage plan at three points: at the house, at the swale flow line, and at the side property line. A minimum of three elevations are required to adequately define a swale cross section. The engineer preparing the drainage plan shall provide supporting calculations to demonstrate that the drainage system meets the design criteria. Cross section elevations of a swale shall be provided at the front property line, the front of the house, the midpoint of the house, the back of the house and at the beginning of the swale.

(3) *Limitation on lot fill for property located in the special flood hazard area.*

a. *Option 1 — Elevated structure without fill.* The proposed improvements to a property shall result in no net increase in volume of material on the lot with the exception of the small amount of concrete used for pier and beam foundation construction that may be permitted by the building official. The fill credit volume may be used to increase the elevation of the lot no more than the amount needed to create a maximum elevation equal to a one percent slope from the existing street, top of curb, edge of road (if no curb exists) or existing ditch high bank, but in no case shall more than eight inches of fill be allowed. The engineer preparing the drainage plan must provide calculations and supporting data demonstrating that no net increase in volume of material is proposed.

b. *Option 2 — Elevated structure with fill.* If the existing ground elevation at the proposed structure is equal to or above the base flood elevation (BFE) and the finished floor of the proposed structure will be elevated to one foot above the BFE by means of fill, then no additional fill on the lot will be allowed. Any volume of material used to raise the existing lot elevation to the one percent or eight inch maximum fill limit for grading and drainage purposes must be mitigated by lowering the finished grade below the existing (pre-construction) elevation elsewhere on the lot. The engineer preparing the drainage plan must provide calculations and supporting data demonstrating that no net increase in volume of material is proposed with the exception of raising the finished floor to one foot above the BFE.

(4) *Limitations on lot fill for property not located in the special flood hazard area.* Lot fill shall be limited to no more than the amount necessary to achieve adequate drainage based on generally accepted engineering design practices but no more than the amount needed to create a maximum elevation equal to a one percent slope from the existing street, top of curb, edge of road (if no curb exists) or existing ditch high bank. In no case shall more than eight inches of fill be allowed on any lot.

(5) *Engineer's seal.* The drainage plan shall be prepared, certified, sealed and signed by a civil engineer licensed as a professional engineer in the state.

(6) The height to which any point on the lot, other than the foundation, may be filled is limited to an elevation calculated by multiplying the distance from the curb by one percent per foot and adding the top of curb elevation. Existing elevations which are higher than the calculated elevations are not required to be cut to meet the requirements of this section. The calculation only applies to fill above the existing elevation. The one percent does not apply to proposed interior grades or cross-slopes of swales. In no case shall any point on the lot be filled more than eight inches above the existing (pre-construction) elevations.

Alternative 7(1)

(7) Garages must be slab on grade construction with a top of slab elevation which shall not exceed an elevation calculated by multiplying the distance from the curb by one percent per foot and adding the top of curb elevation.

Alternative 7(2)

(7) Garages may be elevated above grade so long as No net increase in fill requirements are maintained, and the garage and driveway are pier and beam construction. The garage and driveway must be constructed in accordance with the requirements detailed in Sec. 9-70.18.

Alternative 7(3)

(7) The height to which a driveway may be elevated up to the building line is 1% grade or less. Behind the building line, the driveway or garage can exceed the 1% grade limitation when built in accordance with pier and beam or other approved method of construction. Open areas for

pier and beam construction or other approved methods must be provided with one (1) square inch of net free area for one (1) square foot of enclosed area.

(8) Conflicts. In the event of a conflict between this section and the Building Code, as adopted, the Building Official shall follow the provisions of the Building Code.

Marleny Campos

From: Stephen Redding <sreddingpe@gmail.com>
Sent: Thursday, October 1, 2020 8:33 PM
To: Dan R Collins <drcollins@bellairetx.gov>
Cc: City of Bellaire Building Official <buildingofficial@bellairetx.gov>; Marleny Campos <MCampos@bellairetx.gov>
Subject: [EXTERNAL] Bldgs and Stds Commission NEW BUSINESS

Dan —I have 2 items below for the Bldg Official to look into and if appropriate, for the Commission to take up as new business

Thank you.

Stephen Redding
Commsisoner, Building & Standards Commission
sreddingpe@gmail.com
713 822 3224

1. **INVALID REFERENCE in BELLAIRE AMENDMENTS**

Since Bellaire is currently on the 2018 IRC . Ive found some language in

- Bellaire, Texas - Code of Ordinances
- PART II - CODE OF ORDINANCES
- Chapter 9 - BUILDINGS
- ARTICLE II. - BUILDING CODES that needs updating

THE BELLAIRE AMENDMENTS NIXES 105.2.12 - BUT THERE IS NO SUCH SECTION IN THE 2018 IRC—it stops at 105.2.10 (and fyi nor did I find it in the 2012 or 2009 versions- so I am not sure what list they were looking at when they wrote the amendment— so it might be appropriate to review all the exceptions)

From Bellaire amendments

EXTERNAL email: Exercise caution when opening. Do not click on links or open attachments without verifying the sender's intent.

Sec. 9-17. - Amendments to building code.

The building code adopted by the provisions of this article is hereby amended, altered and changed in the following respects:

105. Section 105, Permits, of the Building Code is hereby amended with respect to subsection 105.2, Work Exempt from Permit, by deleting subsections 105.2.2, 105.2.4 105.2.6, 105.2.7 and 105.2.12.

from the 2018 IRC

R105.2 Work exempt from permit.

Exemption from *permit* requirements of this code shall not be deemed to grant authorization for any work to be done in any manner in violation of the provisions of this code or any other laws or ordinances of this *jurisdiction. Permits* shall not be required for the following:

Building:

1. One-*story* detached *accessory structures*, provided that the floor area does not exceed 200 square feet (18.58 m^2).
2. Fences not over 7 feet (2134 mm) high.
3. Retaining walls that are not over 4 feet (1219 mm) in height measured from the bottom of the footing to the top of the wall, unless supporting a surcharge.
4. Water tanks supported directly upon *grade* if the capacity does not exceed 5,000 gallons (18 927 L) and the ratio of height to diameter or width does not exceed 2 to 1.
5. Sidewalks and driveways.
6. Painting, papering, tiling, carpeting, cabinets, counter tops and similar finish work.
7. Prefabricated swimming pools that are less than 24 inches (610 mm) deep.
8. Swings and other playground equipment.
9. Window awnings supported by an exterior wall that do not project more than 54 inches (1372 mm) from the exterior wall and do not require additional support.
10. Decks not exceeding 200 square feet (18.58 m^2) in area, that are not more than 30 inches (762 mm) above *grade* at any point, are not attached to a dwelling and do not serve the exit door required by Section R311.4.

Table 301.2(1)

Ground Snow Load	Wind design Speed	Topographic Effects	Special Wind Region	Wind Borne Climate Zone	Seismic Design Category	Weathering	Subject to Damage From Frost Line	Termites	Winter Design Temp	Ice Barrier	Flood Hazards	Air Freezing Index	Mean Annual Temp
0	130	0	N	Y	A	N	N	Y	34	N	AE	1500	69

Elevation	Lattitude	Winter Heating	Summer Cooling	Altitude Correction Factor	Indoor Design Temp	Design Cooling Temp	Heating Temp Difference
105	29	28	96	0	34	70	6

Cooling Temp Difference	Wind Velocity Heating	Wind Velocity Cooling	Coincident Wet Bulb	Daily Range	Winter Humidity	Summer Humidity
26	8.5	8	80	M	151	161

59 (winter design grains at 45%, per Manual J table 1A

46 (Summer design grains at 55%, per Manual J table 1A

21 (=96-75)

34 (heating 99% dry bulb per Manual J table 1A)

93 (cooling 1% dry bulb per Manual J table 1A)

72 heating per 2018 IRC paragraph N1101.9

77 (coin. wet bulb per Manual J table 1A)

75 cooling per 2018 IRC paragraph N1101.9

38 (=72-34)

32 (97.5 % for winter from Appendix D, 2018 Inntl Plumbing code)

see info reqd per footnote g of the IRC table

2. **TABLE R301.2(1)**

The Commission asked the prior Bldg Official to complete Table R 301.2(1) from the IRC. This was done but I don't think he got it quite right- my comments back to him are attached but I think he left before getting back to it . I'd like the current Bldg Official to make another pass at getting the table finished and available for architects and builders to reference

R301.2 Climatic and geographic design criteria.

Buildings shall be constructed in accordance with the provisions of this code as limited by the provisions of this section. Additional criteria shall be established by the local *jurisdiction* and set forth in Table R301.2(1).

TABLE R301.2(1)
CLIMATIC AND GEOGRAPHIC DESIGN CRITERIA

GROUND SNOW LOAD[a]	WIND DESIGN				SEISMIC DESIGN CATEGORY[f]	SUBJECT TO DAMAGE FROM			WINTER DESIGN TEMP[e]	ICE BARRIER UNDERLAYMENT REQUIRED[h]	FLOOD HAZARDS[g]	AIR FREEZING INDEX[i]	MEAN ANNUAL TEMP[j]
	Speed[d] (mph)	Topographic effects[k]	Special wind region[l]	Wind-borne debris zone[m]		Weathering[a]	Frost line depth[b]	Termite[c]					
—	—	—	—	—	—	—	—	—	—	—	—	—	—
MANUAL J DESIGN CRITERIA[n]													
Elevation		Lattitude	Winter heating	Summer cooling		Altitude correction factor			Indoor design temperature	Design temperature cooling		Heating temperature difference	
—		—	—	—		—			—	—		—	
Cooling temperature difference		Wind velocity heating	Wind velocity cooling	Coincident wet bulb		Daily range			Winter humidity	Summer humidity		—	
—		—	—	—		—			—	—		—	

Live W
Be
ICC's Dig
7th
Learn how to
ICC res
more out of y
with Di
Try prem
Fre

Item I.2 Crawl Space Enclosure Materials

Sec. 9-363. - Amendments to residential code.

R301. Section 301, of the Residential Code is hereby amended by adding a new section 301.10, Additional Requirements for New Foundation Construction, to read as follows:

301.10. - Additional requirements for new foundation construction.

(a) The provisions of this section shall be applicable only to new foundation construction and shall not be applicable or affect foundation construction which is either characterized as add-on and/or remodeling unless the addition is greater than 1,000 square feet or two stories in height.

(b) Prior to the pouring of any concrete, a soil engineer shall inspect the compaction, fill thickness verification, drilled footings, concrete and all other areas deemed pertinent and shall carefully examine all of the pre-pouring work that has been accomplished. Excess soil produced during the excavation for foundation piers and grade beams shall be removed from the site within two weeks after placement of the concrete.

(c) A soil compaction inspection and testing shall be performed and shall include some grade testing and fill thickness. All fill soils shall be tested in lifts.

(d) A structural engineer shall review the initial soil engineer's report and design the foundation accordingly. The structural engineer shall further inspect the work that may be ongoing at any time and shall make as many inspections as necessary to ensure compliance with design criteria.

(e) Prior to the start of any further construction, the soil engineer and structural engineer shall certify by letter to the city that the inspections as herein required have been made and, based upon the review of data, that the foundation as constructed and poured substantially conforms to the design and the intent of the soil exploration and foundation plan which has been submitted for a permit under other provisions of this Code.

(f) For any crawl space, no wood products are allowed within 18 inches of grade.

(g) For any crawl space, a minimum of two drains are required inside pier and beam foundations to provide positive drainage. The drains are to be connected to the lot drainage system. This drain system shall be included in the required drainage plan.

9-17 Ammendments to Building Code

(h) Sections R402.1 and R402.2 of the International Energy Conservation Code are herby amended to include that:

(i) In addition to the requirements of Sections R402.1 and R402.2 of the 2012 IECC, an air barrier and Class III Vapor Retarder shall be applied over all surfaces of the insulation facing the crawlspace, if the insulation does not effectively provide the same. No Class I or Class II Vapor Retarders shall be applied over the interior surface of the floor assembly above a crawlspace, except at shower pans and areas intended to hold water.

AN ACT

relating to certain regulations adopted by governmental entities for the building products, materials, or methods used in the construction or renovation of residential or commercial buildings.

BE IT ENACTED BY THE LEGISLATURE OF THE STATE OF TEXAS:

SECTION 1. Title 10, Government Code, is amended by adding Subtitle Z to read as follows:

SUBTITLE Z. MISCELLANEOUS PROVISIONS PROHIBITING CERTAIN GOVERNMENTAL ACTIONS

CHAPTER 3000. GOVERNMENTAL ACTION AFFECTING RESIDENTIAL AND COMMERCIAL CONSTRUCTION

Sec. 3000.001. DEFINITIONS. In this chapter:

(1) "National model code" has the meaning assigned by Section 214.217, Local Government Code.

(2) "Governmental entity" has the meaning assigned by Section 2007.002.

Sec. 3000.002. CERTAIN REGULATIONS REGARDING BUILDING PRODUCTS, MATERIALS, OR METHODS PROHIBITED.

(a) Notwithstanding any other law and except as provided by Subsection (d), a governmental entity may not adopt or enforce a rule, charter provision, ordinance, order, building code, or other regulation that:

(1) prohibits or limits, directly or indirectly, the use or installation of a building product or material in the construction, renovation, maintenance, or other alteration of a residential or commercial building if the building product or material is approved for use by a national model code published within the last three code cycles that applies to the construction, renovation, maintenance, or other alteration of the building; or

(2) establishes a standard for a building product, material, or aesthetic method in construction, renovation, maintenance, or other alteration of a residential or commercial building if the standard is more stringent than a standard for the product, material, or aesthetic method under a national model code published within the last three code cycles that applies to the construction, renovation, maintenance, or other alteration of the building.

(b) A governmental entity that adopts a building code governing the construction, renovation, maintenance, or other alteration of a residential or commercial building may amend a provision of the building code to conform to local concerns if the amendment does not conflict with Subsection (a).

(c) This section does not apply to:

(1) a program established by a state agency that requires particular standards, incentives, or financing arrangements in order to comply with requirements of a state or federal funding source or housing program;

(2) a requirement for a building necessary to consider the building eligible for windstorm and hail insurance coverage under Chapter 2210, Insurance Code;

(3) an ordinance or other regulation that regulates outdoor lighting that is adopted for the purpose of reducing light pollution and that:

(A) is adopted by a governmental entity that is certified as a Dark Sky Community by the International Dark-Sky Association as part of the International Dark Sky Places Program; or

(B) applies to outdoor lighting within five miles of the boundary of a military base in which an active training program is conducted;

(4) an ordinance or order that:

(A) regulates outdoor lighting; and

(B) is adopted under Subchapter B, Chapter 229, Local Government Code, or Subchapter B, Chapter 240, Local Government Code;

(5) a building located in a place or area designated for its historical, cultural, or architectural importance and significance that a municipality may regulate under Section 211.003(b), Local Government Code, if the municipality:

(A) is a certified local government under the National Historic Preservation Act (54 U.S.C. Section 300101 et seq.); or

(B) has an applicable landmark ordinance that meets the requirements under the certified local government program as determined by the Texas Historical Commission;

(6) a building located in a place or area designated for its historical, cultural, or architectural importance and significance by a governmental entity, if designated before April 1, 2019;

(7) a building located in an area designated as a historic district on the National Register of Historic Places;

(8) a building designated as a Recorded Texas Historic Landmark;

(9) a building designated as a State Archeological Landmark or State Antiquities Landmark;

(10) a building listed on the National Register of Historic Places or designated as a landmark by a governmental entity;

(11) a building located in a World Heritage Buffer Zone; and

(12) a building located in an area designated for development, restoration, or preservation in a main street city under the main street program established under Section 442.014.

(d) A municipality that is not a municipality described by Subsection (c)(5)(A) or (B) may adopt or enforce a regulation described by Subsection (a) that applies to a building located in a place or area designated on or after April 1, 2019, by the municipality for its historical, cultural, or architectural importance and significance, if the municipality has the voluntary consent from the building owner.

(e) A rule, charter provision, ordinance, order, building code, or other regulation adopted by a governmental entity that conflicts with this section is void.

Sec. 3000.003. INJUNCTION. (a) The attorney general or an aggrieved party may file an action in district court to enjoin a violation or threatened violation of Section 3000.002.

(b) The court may grant appropriate relief.

(c) The attorney general may recover reasonable attorney's fees and costs incurred in bringing an action under this section.

(d) Sovereign and governmental immunity to suit is waived and abolished only to the extent necessary to enforce this chapter.

Sec. 3000.004. OTHER PROVISIONS NOT AFFECTED. This chapter does not affect provisions regarding the installation of a fire sprinkler protection system under Section 1301.551(i), Occupations Code, or Section 775.045(a)(1), Health and Safety Code.

Sec. 3000.005. SEVERABILITY. If any provision of a rule, charter provision, ordinance, order, building code, or other regulation described by Section 3000.002(a) is held invalid under this chapter, the invalidity does not affect other provisions or applications of the rule, charter provision, ordinance, order, building code, or other regulation that can be given effect without the invalid provision or application, and to this end the provisions of the rule, charter provision, ordinance, order, building code, or other regulation are severable.

SECTION 2. This Act takes effect September 1, 2019.

_____ _____

President of the Senate Speaker of the House

I certify that H.B. No. 2439 was passed by the House on April 30, 2019, by the following vote: Yeas 124, Nays 21, 2 present, not voting; and that the House concurred in Senate amendments to H.B. No. 2439 on May 23, 2019, by the following vote: Yeas 133, Nays 9, 1 present, not voting.

_____

Chief Clerk of the House

I certify that H.B. No. 2439 was passed by the Senate, with amendments, on May 19, 2019, by the following vote: Yeas 26, Nays 5.

_____

Secretary of the Senate

APPROVED: _____

Date

_____

Governor

CHAPTER 3: BUILDING PLANNING

SECTION R317
PROTECTION OF WOOD AND WOOD-BASED PRODUCTS AGAINST DECAY

R317.1 Location required.

Protection of wood and wood-based products from decay shall be provided in the following locations by the use of naturally durable wood or wood that is preservative-treated in accordance with AWPA U1.

1. Wood joists or the bottom of a wood structural floor where closer than 18 inches (457 mm) or wood girders where closer than 12 inches (305 mm) to the exposed ground in crawl spaces or unexcavated area located within the periphery of the building foundation.
2. Wood framing members that rest on concrete or masonry exterior foundation walls and are less than 8 inches (203 mm) from the exposed ground.
3. Sills and sleepers on a concrete or masonry slab that is in direct contact with the ground unless separated from such slab by an impervious moisture barrier.
4. The ends of wood girders entering exterior masonry or concrete walls having clearances of less than $^1/_2$ inch (12.7 mm) on tops, sides and ends.
5. Wood siding, sheathing and wall framing on the exterior of a building having a clearance of less than 6 inches (152 mm) from the ground or less than 2 inches (51 mm) measured vertically from concrete steps, porch slabs, patio slabs and similar horizontal surfaces exposed to the weather.
6. Wood structural members supporting moisture-permeable floors or roofs that are exposed to the weather, such as concrete or masonry slabs, unless separated from such floors or roofs by an impervious moisture barrier.
7. Wood furring strips or other wood framing members attached directly to the interior of exterior masonry walls or concrete walls below *grade* except where an *approved* vapor retarder is applied between the wall and the furring strips or framing members.

❖ This section addresses the need for minimum protection against decay damage for wood members located in certain locations.

For those portions of a wood-framed structure that are subject to damage by decay, the code mandates that the lumber be pressure-preservative treated or be naturally durable wood, or be of a species of wood having a natural resistance to decay. Naturally durable wood by definition is the heartwood of decay-resistant redwood, cedars, black locust and black walnut.

Item 1: Crawl spaces and unexcavated areas under a building usually contain moisture-laden air. These spaces must be ventilated in accordance with Section R408 to remove as much moisture as possible before it causes decay. Wood placed a minimum specified distance above grade in unexcavated under-floor areas or crawl spaces, as shown in Commentary Figure R317.1(1), need not be either preservativetreated wood or wood that is naturally decay-resistant durable wood. These clearances below floor joists and beams are deemed to be the minimum necessary to allow adequate circulation and removal of moisture from the air and from the wood framing members. Such clearances apply within the exterior wall line of the building foundation.

Item 2: Foundation walls will absorb moisture from the ground and by capillary action move it to framing members that are in contact with the foundation. Unless a minimum clearance of 8 inches (203 mm) is maintained from the finished grade to wood sills resting on concrete or masonry exterior foundation walls, decay-resistant or preservative-treated wood, as shown in Commentary Figure R317.1(2), must be used. The 8-inch (203 mm) clearance specified in this section has been determined to be large enough to prevent wetting of wood framing members under most circumstances.

Item 3: Concrete and masonry slabs that are in direct contact with the earth are very susceptible to moisture because of absorption of ground water. This can occur on interior slabs, as well as at the perimeter. In the case of wood sills or sleepers placed on concrete or masonry slabs, decay-resistant wood or pressure-treated wood is required where the slabs are in direct contact with the ground, as illustrated in Commentary Figure R317.1(3). Concrete that is fully separated from the ground by a vapor barrier is not in direct contact with earth.

Item 4: A minimum $^1/_2$-inch (12.7 mm) clearance along the top, sides and ends of wood members projecting into exterior masonry or concrete walls must be maintained, as illustrated in Commentary Figure R317.1(4), unless the wood is treated or is of a species that is naturally decay resistant.

Item 5: Experience has shown that wood siding may extend below the sill plate to within 6 inches (152 mm) of the earth

2018 International Residential Code and Commentary Volume 1 @ 2018 ICC All Rights Reserved.
Accessed by Kevin Taylor on 07/17/2020 pursuant to License Agreement with ICC. No further reproduction or distribution authorized. Any Unauthorized reproduction or distribution is a violation of the federal copyright, and subject to civil and criminal penalties thereunder.

without decaying. Commentary Figure R317.1(5) shows the required minimum 6-inch (152 mm) clearance from the ground for wood siding, sheathing and wall framing on the exterior of a building. It should not be in direct contact with the foundation wall. If the sheathing is located over a concrete step or slab, the clearance may be reduced to 2 inches (51 mm) minimum.

Item 6: Concrete or masonry slabs that serve as roofs or floor systems that are exposed to the weather are very susceptible to moisture from rain or snow. If these slabs are supported by wood, the wood must be decay resistant or must be separated from the slabs by vapor barriers so there is not direct contact. This is similar to Item 3.

Item 7: When a basement area is finished, a common practice is to provide wood furring strips on top of the concrete or masonry walls for attachment of finishes. These furring strips must either be of decay-resistant material or must be separated from the wall by a vapor barrier. This will prevent the moisture from moving through the walls and rotting the furring strips, and even possibly transferring the moisture to the inside finish materials.

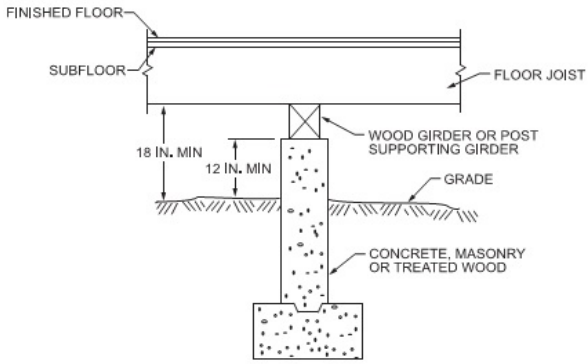

For SI: 1 inch = 25.4 mm.

Commentary Figure R317.1(1)
MINIMUM SEPARATION OF NONTREATED WOOD FROM GROUND

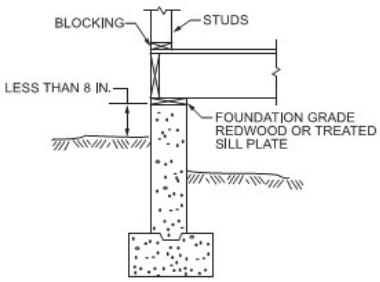

For SI: 1 inch = 25.4 mm.

Commentary Figure R317.1(2)
WOOD SILLS ON FOUNDATION WALLS

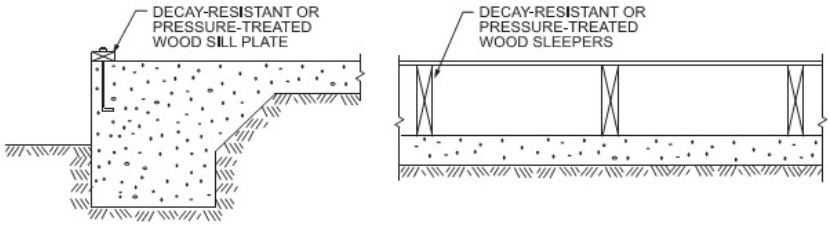

Commentary Figure R317.1(3)
WOOD SILLS AND SLEEPERS

2018 International Residential Code and Commentary Volume 1 @ 2018 ICC All Rights Reserved.
Accessed by Kevin Taylor on 07/17/2020 pursuant to License Agreement with ICC. No further reproduction or distribution authorized. Any Unauthorized reproduction or distribution is a violation of the federal copyright, and subject to civil and criminal penalties thereunder.

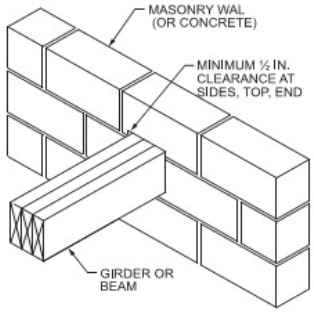

For SI: 1 inch = 25.4 mm.

Commentary Figure R317.1(4)
NONTREATED WOOD PROJECTING INTO BEAM POCKET

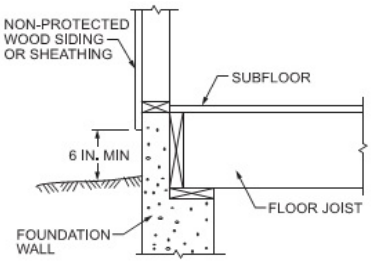

For SI: 1 inch = 25.4 mm.

Commentary Figure R317.1(5)
NONTREATED WOOD SIDING OR SHEATHING

R317.1.1 Field treatment.

Field-cut ends, notches and drilled holes of preservative-treated wood shall be treated in the field in accordance with AWPA M4.

❖ The requirement for field treatment of cuts and holes is duplicated from Section R318.1.2, which addresses the same type of situation in treated wood applications for termite protection. Where pressurepreservative-treated wood is used for protection against decay, any cuts, notches or bored holes done in the field must be retreated. The retreatment methods and materials are to be in accordance with AWPA M4, which regulates the care of preservativetreated wood products.

R317.1.2 Ground contact.

All wood in contact with the ground, embedded in concrete in direct contact with the ground or embedded in concrete exposed to the weather that supports permanent structures intended for human occupancy shall be *approved* pressure-preservative-treated wood suitable for ground contact use, except that untreated wood used entirely below groundwater level or continuously submerged in fresh water shall not be required to be pressure-preservative treated.

❖ Wood members that are designed to be in contact with the ground and wood that is embedded in concrete in direct contact with the ground, or embedded in concrete exposed to the weather must be suitable for ground contact use. This provision applies to all wood members that support permanent structures designed for human occupancy. Untreated wood is permitted only where the wood members will be located below the ground water level or where the members are continuously submerged in fresh water because fungus that decays wood and termites cannot survive in a water-only environment with no oxygen (see Commentary Figure R317.1.2).

2018 International Residential Code and Commentary Volume 1 @ 2018 ICC All Rights Reserved.
Accessed by Kevin Taylor on 07/17/2020 pursuant to License Agreement with ICC. No further reproduction or distribution authorized. Any Unauthorized reproduction or distribution is a violation of the federal copyright, and subject to civil and criminal penalties thereunder.

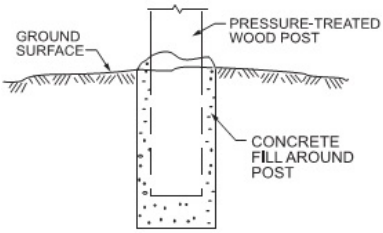

Commentary Figure R317.1.2
WOOD POST EMBEDDED IN CONCRETE

R317.1.3 Geographical areas.

In geographical areas where experience has demonstrated a specific need, *approved* naturally durable or pressure-preservative-treated wood shall be used for those portions of wood members that form the structural supports of buildings, balconies, porches or similar permanent building appurtenances where those members are exposed to the weather without adequate protection from a roof, eave, overhang or other covering that would prevent moisture or water accumulation on the surface or at joints between members. Depending on local experience, such members typically include:

1. Horizontal members such as girders, joists and decking.
2. Vertical members such as posts, poles and columns.
3. Both horizontal and vertical members.

❖ This section gives the local jurisdiction the authority to require additional protection where the need can be documented by experience. Such experience may include high water tables, extended high-humidity conditions, etc.

Guidance is provided in this section for the protection of wood members other than those specifically identified elsewhere in this section that are exposed to the weather without benefit of protective elements. Included in the list of possible wood members that must be pressure-preservative treated or naturally durable wood are girders, joists, decking, columns and similar structural members of porches, balconies and other exterior building elements.

R317.1.4 Wood columns.

Wood columns shall be *approved* wood of natural decay resistance or *approved* pressure-preservative-treated wood.

Exceptions:

1. Columns exposed to the weather or in *basements* where supported by concrete piers or metal pedestals projecting 1 inch (25 mm) above a concrete floor or 6 inches (152 mm) above exposed earth and the earth is covered by an *approved* impervious moisture barrier.
2. Columns in enclosed crawl spaces or unexcavated areas located within the periphery of the building where supported by a concrete pier or metal pedestal at a height more than 8 inches (203 mm) from exposed earth and the earth is covered by an impervious moisture barrier.
3. Deck posts supported by concrete piers or metal pedestals projecting not less than 1 inch (25 mm) above a concrete floor or 6 inches (152 mm) above exposed earth.

❖ Protection against decay is required for wood structural columns. The exceptions permit the use of common framing lumber where the column is isolated from the earth or concrete. Generally, structural elements in basements or cellars are easier to inspect, which explains the lower clearances. Columns in crawl spaces must have a larger separation distance to safeguard against termites between inspections. In Exceptions 1 and 2, an impervious moisture barrier must be installed to ensure the column does not absorb water from the earth or concrete pier. Exception 3 allows deck posts to be of nontreated wood if they are supported on concrete piers or metal pedestals at least 1 inch thick.

R317.1.5 Exposed glued-laminated timbers.

The portions of glued-laminated timbers that form the structural supports of a building or other structure and are exposed to weather and not properly protected by a roof, eave or similar covering shall be pressure treated with preservative, or be manufactured from naturally durable or preservative-treated wood.

❖ It is common practice to design large glued-laminated arches that are connected to foundations near ground level. Exterior walls are built inside the span of these arches, leaving the initial few feet of the wood arches exposed to the

2018 International Residential Code and Commentary Volume 1 @ 2018 ICC All Rights Reserved.
Accessed by Kevin Taylor on 07/17/2020 pursuant to License Agreement with ICC. No further reproduction or distribution authorized. Any Unauthorized reproduction or distribution is a violation of the federal copyright, and subject to civil and criminal penalties thereunder.

weather. Experience has shown that covering the tops of these arches with metal or other water seals is not sufficient to prevent decay of the timber. Therefore, arches and other exposed wood members not protected by roofs or similar covers must be laminated of naturally durable or preservative-treated wood.

R317.2 Quality mark.

Lumber and plywood required to be pressure-preservative treated in accordance withSection R318.1 shall bear the quality *mark* of an *approved* inspection agency that maintains continuing supervision, testing and inspection over the quality of the product and that has been *approved* by an accreditation body that complies with the requirements of the American Lumber Standard Committee treated wood program.

❖ The quality of lumber or plywood that has been pressure-preservative treated in accordance with the code is identifiable through a quality mark, such as shown in Commentary Figure R317.2.1. Without the proper identifying mark, it would be impossible to determine in the field that preservative-treated wood conforms to the applicable standards. The identifying mark must be from an approved inspection agency that has continuous follow-up services. Additionally, the inspection agency must be certified as being competent by an approved organization. The required identifying mark is in addition to the requirements for grade marks to identify the species and grade as specified elsewhere in the code.

R317.2.1 Required information.

The required quality *mark* on each piece of pressure-preservative-treated lumber or plywood shall contain the following information:

1. Identification of the treating plant.
2. Type of preservative.
3. The minimum preservative retention.
4. End use for which the product was treated.
5. Standard to which the product was treated.
6. Identity of the *approved* inspection agency.
7. The designation "Dry," if applicable.

Exception: Quality *mark*s on lumber less than 1 inch (25 mm) nominal thickness, or lumber less than nominal 1 inch by 5 inches (25 mm by 127 mm) or 2 inches by 4 inches (51 mm by 102 mm) or lumber 36 inches (914 mm) or less in length shall be applied by stamping the faces of exterior pieces or by end labeling not less than 25 percent of the pieces of a bundled unit.

❖ This section provides the information that must be shown on a quality mark for pressure-preservativetreated lumber or plywood. Commentary Figure R317.2.1 illustrates how this information may be shown on a quality label.

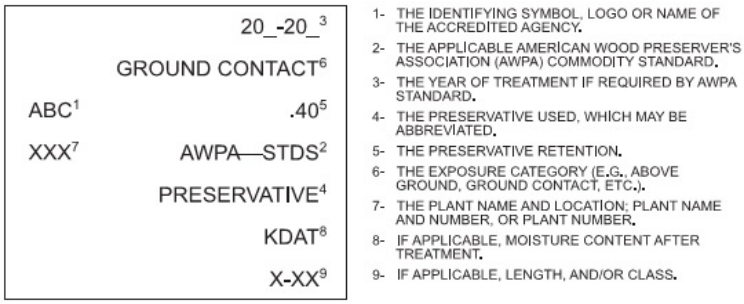

Commentary Figure R317.2.1
TYPICAL LABEL FOR PRESSURE-TREATED WOOD

R317.3 Fasteners and connectors in contact with preservative-treated and fire-retardant-treated wood.

Fasteners, including nuts and washers, and connectors in contact with preservative-treated wood and fire-retardant-treated wood shall be in accordance with this section. The coating weights for zinc-coated fasteners shall be in accordance with ASTM A153. Stainless steel driven fasteners shall be in accordance with the material requirements of ASTM F1667.

❖ This section provides a charging statement for fasteners utilized in situations where the surroundings or the type of wood could corrode the fasteners over time. ASTM A153 specifies criteria for hot-dipped zinc coating for iron and steel hardware. ASTM F1667 provides minimum specifications for driven nails, spikes and staples.

2018 International Residential Code and Commentary Volume 1 @ 2018 ICC All Rights Reserved.
Accessed by Kevin Taylor on 07/17/2020 pursuant to License Agreement with ICC. No further reproduction or distribution authorized. Any Unauthorized reproduction or distribution is a violation of the federal copyright, and subject to civil and criminal penalties thereunder.

R317.3.1 Fasteners for preservative-treated wood.

Fasteners, including nuts and washers, for preservative-treated wood shall be of hot-dipped, zinc-coated galvanized steel, stainless steel, silicon bronze or copper. Staples shall be of stainless steel. Coating types and weights for connectors in contact with preservative-treated wood shall be in accordance with the connector manufacturer's recommendations. In the absence of manufacturer's recommendations, not less than ASTM A653 type G185 zinc-coated galvanized steel, or equivalent, shall be used.

Exceptions:

1. $^{1}/_{2}$-inch-diameter (12.7 mm) or greater steel bolts.
2. Fasteners other than nails, staples and timber rivets shall be permitted to be of mechanically deposited zinc-coated steel with coating weights in accordance with ASTM B695, Class 55 minimum.
3. Plain carbon steel fasteners in SBX/DOT and zinc borate preservative-treated wood in an interior, dry environment shall be permitted.

❖ Fasteners used in conjunction with pressure-preservative-treated wood must be corrosion resistant. Some chemicals used to preservative-treat or fireretardant-treat wood may have a corrosive effect on fasteners installed in locations that are high in moisture. Acceptable materials include stainless steel, silicon bronze, copper or hot-dipped zinc-coated galvanized steel. Such fasteners are also mandated for use with fire-retardant-treated wood members. Use of durable fasteners is required to decrease the likelihood that the load-carrying capacity of fasteners will be reduced by corrosion.

The first exception exempts large steel bolts.

The second exception allows the use of a mechanical galvanization process in which the coating weight is mandatory as outlined in ASTM B695.

The third exception permits the use of nonzinccoated galvanized steel where used in a dry environment and in contact with SBX/DOT and zinc boratetreated wood.

R317.3.2 Fastenings for wood foundations.

Fastenings, including nuts and washers, for wood foundations shall be as required inAWC PWF.

❖ A permanent wood foundation (PWF) system is intended for light-frame construction including residential buildings. The AWC PWF—Permanent Wood Foundation Design Specification, primarily addresses the structural design requirements.

The PWF is a load-bearing wood frame wall and floor system designed for both above- and belowgrade use as a foundation for light-frame construction. The PWF specifications are based on information developed cooperatively by the wood products industry and the U.S. Forest Service, with the advice and guidance of the Department of Housing and Urban Development's (HUD) Federal Housing Administration, and utilizing research findings of the National Association of Home Builders Research Center.

The PWF standard is also referenced inSections R401.1 and R404.2.3.

R317.3.3 Fasteners for fire-retardant-treated wood used in exterior applications or wet or damp locations.

Fasteners, including nuts and washers, for fire-retardant-treated wood used in exterior applications or wet or damp locations shall be of hot-dipped, zinc-coated galvanized steel, stainless steel, silicon bronze or copper. Fasteners other than nails, staples and timber rivets shall be permitted to be of mechanically deposited zinc-coated steel with coating weights in accordance with ASTM B695, Class 55 minimum.

2018 International Residential Code and Commentary Volume 1 @ 2018 ICC All Rights Reserved.
Accessed by Kevin Taylor on 07/17/2020 pursuant to License Agreement with ICC. No further reproduction or distribution authorized. Any Unauthorized reproduction or distribution is a violation of the federal copyright, and subject to civil and criminal penalties thereunder.

severe than the exposure for fire-retardant treated wood in wet, damp or exterior locations. Manufacturers of fire-retardant-treated wood make their recommendations for the appropriate fastener for fire-retardant-treated wood based on testing. If the manufacturer has no recommendations, the more restrictive provisions in Section R317.3.3 are applicable.

2018 International Residential Code and Commentary Volume 1 @ 2018 ICC All Rights Reserved.
Accessed by Kevin Taylor on 07/17/2020 pursuant to License Agreement with ICC. No further reproduction or distribution authorized. Any Unauthorized reproduction or distribution is a violation of the federal copyright, and subject to civil and criminal penalties thereunder.

CHAPTER 4: FOUNDATIONS

SECTION R408
UNDER-FLOOR SPACE

R408.1 Ventilation.

The under-floor space between the bottom of the floor joists and the earth under any building (except space occupied by a *basement*) shall have ventilation openings through foundation walls or exterior walls. The minimum net area of ventilation openings shall be not less than 1 square foot (0.0929 m^2) for each 150 square feet (14 m^2) of under-floor space area, unless the ground surface is covered by a Class 1 vapor retarder material. Where a Class 1 vapor retarder material is used, the minimum net area of ventilation openings shall be not less than 1 square foot (0.0929 m^2) for each 1,500 square feet (140 m^2) of under-floor space area. One such ventilating opening shall be within 3 feet (914 mm) of each corner of the building.

❖ Raised floor construction results in an under-floor space, commonly referred to as a crawl space. To control condensation within crawl space areas and thus reduce the chance of dry rot, natural ventilation of such spaces by reasonably distributed openings through foundation walls or exterior walls is required. Condensation is a function of the geographical location and climatic conditions; therefore, the dependence on ventilating openings through the foundation wall or exterior wall may run counter to energy conservation measures. The use of a vapor retarder material on the ground surface inhibits the flow of moisture from the ground surface into the crawl space and thus reduces the need for ventilation. Commentary Figure R408.1 illustrates the use of openings through the foundation walls.

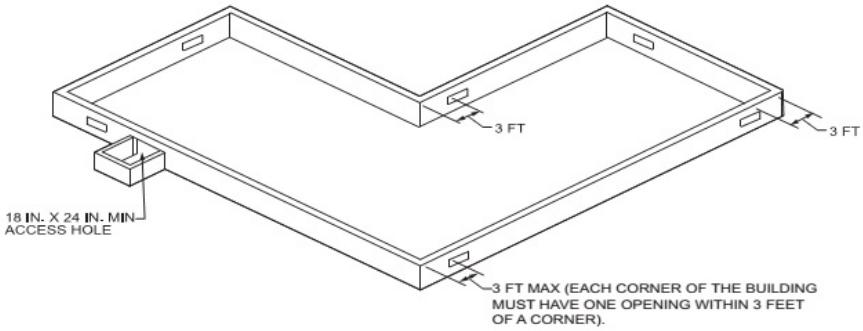

SCREEN OPENINGS (MESH OPENING ≤ 1/4 IN.) THROUGH FOUNDATION WALL TO CRAWL SPACE. TOTAL NET CLEAR AREA OF OPENING EQUALS THE CRAWL SPACE AREA DIVIDED BY 150.

For SI: 1 inch = 25.4 mm, 1 foot = 304.8 mm.

Commentary Figure R408.1
CRAWL SPACE VENTILATION

R408.2 Openings for under-floor ventilation.

The minimum net area of ventilation openings shall be not less than 1 square foot (0.0929 m^2) for each 150 square feet (14 m^2) of under-floor area. One ventilation opening shall be within 3 feet (915 mm) of each corner of the building. Ventilation openings shall be covered for their height and width with any of the following materials provided that the least dimension of the covering shall not exceed $^1/_4$ inch (6.4 mm):

1. Perforated sheet metal plates not less than 0.070 inch (1.8 mm) thick.
2. Expanded sheet metal plates not less than 0.047 inch (1.2 mm) thick.
3. Cast-iron grill or grating.
4. Extruded load-bearing brick vents.
5. Hardware cloth of 0.035 inch (0.89 mm) wire or heavier.
6. Corrosion-resistant wire mesh, with the least dimension being $^1/_8$ inch (3.2 mm) thick.

Exception: The total area of ventilation openings shall be permitted to be reduced to $^1/_{1,500}$ of the under-floor area where the ground surface is covered with an *approved* Class I vapor retarder material and the required openings are placed to provide cross ventilation of the space. The installation of operable louvers shall not be prohibited.

❖ Installing a covering material over the ventilation opening keeps animals such as rodents or vermin from entering the crawl space. Several options are provided and they all must have openings that have no dimension exceeding $^1/_4$ inch

2018 International Residential Code and Commentary Volume 1 @ 2018 ICC All Rights Reserved.
Accessed by Kevin Taylor on 07/22/2020 pursuant to License Agreement with ICC. No further reproduction or distribution authorized. Any Unauthorized reproduction or distribution is a violation of the federal copyright, and subject to civil and criminal penalties thereunder.

(6.4 mm). The area of the ventilation opening accounts for net free area of the covering material used to protect the ventilation opening. For some covering materials the net free area can be up to 50 percent less than the gross area of the ventilation opening.

The use of a vapor retarder material on the ground surface inhibits the flow of moisture from the ground surface into the crawl space and thus reduces, if not virtually eliminates, the need for ventilation. Therefore, the exception provides for a drastic reduction in the amount of ventilation openings required. While the vapor retarder may significantly reduce the moisture accumulation, ventilation openings are still required but may be equipped with manual dampers to permit them to be closed during the coldest weeks of the year in northern climates.

The following is an example of the area calculation:

Example 1:

A house has a crawl space area of 1,300 square feet (121 m^2). The amount of ventilation opening required is 1,300/150 = 8.7 square feet (0.81 m^2) × 144 square inches per square foot = 1,252 square inches (0.81 m^2). This is the total net clear area of opening required that must be distributed among all the openings. An 8-inch by 16-inch (203 mm by 406 mm) opening provides 128 square inches (0.083 m^2). Ten 8-inch by 16-inch (203 mm by 406 mm) openings will provide 1,280 square inches (0.83 m^2), which is greater than the 1,252 square inches (0.81 m^2) required.

The following is an example using the exception:

Example 2:

In Example 1, the required opening area (1,252 square inches) may be reduced by a factor of 10 to 125.2 square inches (0.081 m^2) if an approved Class I vapor retarder is used on the ground surface of the crawl space in accordance with the exception. Note that opening placement must provide cross ventilation.

R408.3 Unvented crawl space.

Ventilation openings in under-floor spaces specified in Sections R408.1 and R408.2 shall not be required where the following items are provided:

1. Exposed earth is covered with a continuous Class I vapor retarder. Joints of the vapor retarder shall overlap by 6 inches (152 mm) and shall be sealed or taped. The edges of the vapor retarder shall extend not less than 6 inches (152 mm) up the stem wall and shall be attached and sealed to the stem wall or insulation.
2. One of the following is provided for the under-floor space:
   - 2.1. Continuously operated mechanical exhaust ventilation at a rate equal to 1 cubic foot per minute (0.47 L/s) for each 50 square feet (4.7 m^2) of *crawl space* floor area, including an air pathway to the common area (such as a duct or transfer grille), and perimeter walls insulated in accordance with Section N1102.2.11 of this code.
   - 2.2. *Conditioned air* supply sized to deliver at a rate equal to 1 cubic foot per minute (0.47 L/s) for each 50 square feet (4.7 m^2) of under-floor area, including a return air pathway to the common area (such as a duct or transfer grille), and perimeter walls insulated in accordance with Section N1102.2.11 of this code.
   - 2.3. Plenum in existing structures complying with Section M1601.5, if under-floor space is used as a plenum.
   - 2.4. Dehumidification sized to provide 70 pints (33 liters) of moisture removal per day for every 1,000 square feet (93 m^2) of *crawl space* floor area.

❖ This section lists several conditions under which the ventilation openings through the foundation walls are not required. The exposed earth of the under-floor area must be covered with a continuous Class I vapor retarder. See the commentary to Section R202 for the definition of "Vapor retarder class." If the perimeter walls are insulated, either a continuously operating mechanical exhaust vent, conditioned air or dehumidification must be provided in order to eliminate the ventilation openings.

Elimination of the ventilation openings is permitted in existing structures where the under-floor space is used as a plenum. Under-floor plenums are prohibited in new construction (see commentary, Section M1601.5).

R408.4 Access.

Access shall be provided to all under-floor spaces. Access openings through the floor shall be not smaller than 18 inches by 24 inches (457 mm by 610 mm). Openings through a perimeter wall shall be not less than 16 inches by 24 inches (407 mm by 610 mm). Where any portion of the through-wall access is below *grade*, an areaway not less than 16 inches by 24 inches (407 mm by 610 mm) shall be provided. The bottom of the areaway shall be below the threshold of the access opening. Through wall access openings shall not be located under a door to the residence. See Section M1305.1.3 for access requirements where mechanical *equipment* is located under floors.

2018 International Residential Code and Commentary Volume 1 @ 2018 ICC All Rights Reserved.
Accessed by Kevin Taylor on 07/22/2020 pursuant to License Agreement with ICC. No further reproduction or distribution authorized. Any Unauthorized reproduction or distribution is a violation of the federal copyright, and subject to civil and criminal penalties thereunder.

❖ The provisions of this section require access to all under-floor spaces. Access is required for continuing maintenance of the building and for inspection and repair of such items as plumbing, mechanical systems or electrical system runs within the crawl space. This section addresses the different conditions encountered in accessing an under-floor space through the floor system or the foundation wall. See Commentary Figure R408.1. The 16- and 24-inch (406 mm and 610 mm) dimensions are to work with standard concrete masonry unit (CMU) coursing. Where mechanical equipment is located under the floor, the minimum access opening must comply with Section M1305.1.3.

R408.5 Removal of debris.

The under-floor *grade* shall be cleaned of all vegetation and organic material. Wood forms used for placing concrete shall be removed before a building is occupied or used for any purpose. Construction materials shall be removed before a building is occupied or used for any purpose.

❖ Vegetation, stumps, roots and other matter left in an excavation around a building are major causes of termite infestation and moisture problems. As such material decays, the ground settles, negating the original drainage plan. Even before decay, the material provides pockets for water accumulation, which can have subsequent destructive impact on the structure. To eliminate a natural attraction to termites, insects or animals, all vegetation and organic material must be cleared.

R408.6 Finished grade.

The finished *grade* of under-floor surface shall be permitted to be located at the bottom of the footings; however, where there is evidence that the groundwater table can rise to within 6 inches (152 mm) of the finished floor at the building perimeter or where there is evidence that the surface water does not readily drain from the building site, the *grade* in the under-floor space shall be as high as the outside finished *grade*, unless an *approved* drainage system is provided.

❖ To circumvent moisture accumulation in the crawl space area, the grade in the under-floor space must be at the same elevation as grade outside of the building if the groundwater table can rise to within 6 inches (152 mm) of the finished floor elevation or the surface water does not readily drain from the site. An alternative would be an approved drainage system.

R408.7 Flood resistance.

For buildings located in flood hazard areas as established in Table R301.2(1):

1. Walls enclosing the under-floor space shall be provided with flood openings in accordance with Section R322.2.2.
2. The finished ground level of the under-floor space shall be equal to or higher than the outside finished ground level on at least one side.

Exception: Under-floor spaces that meet the requirements of FEMA TB 11-1.

❖ In flood hazard areas, walls enclosing under-floor spaces are to have flood openings to minimize hydrostatic loads by allowing the free inflow and outflow of floodwaters. The provision in Item 1 alerts the designer that flood openings are required in addition to standard ventilation openings.

The provision in Item 2 requires the elevation of the finished ground level of the under-floor space be at or above the elevation of the outside finished ground level on the entire length of at least one side. In flood hazard areas, if the floor of an enclosed area, including a crawl space or under-floor space, is below the exterior grade on all sides, then the building is considered to have a basement and Section R322 requires basements to be elevated to or above base flood elevation plus 1 foot (305 mm) or the design flood elevation. Note that an under-floor space may be partially below grade as long as the interior finished ground level is at or above the exterior finished grade on the entire length of at least one side. Use of an approved drainage system, allowed under Section R408.6, does not satisfy R408.7.

The exception to Item 2 allows under-floor spaces to be below the elevation of the outside finished ground level on all sides, provided that the under-floor space meets the requirements of FEMA TB 11. Technical Bulletin (TB) 11 has very specific limitations on maximum depth below grade (top of footing not more than 2 feet below grade), maximum foundation wall height (not more than 4 feet from top of footing to top of wall), and floodwater velocity (not more than 5 feet per second). FEMA TB 11 states that “Communities that choose to allow below-grade crawlspace construction will be required to amend their floodplain management ordinance to include the provisions outlined in the [Technical Bulletin] on below-grade crawlspace construction.” Use of FEMA TB 11 will result in flood insurance rates higher than for buildings that have the finished ground level of the under-floor space at or above the elevation of the outside finished ground level on the entire length of at least one side.

2018 International Residential Code and Commentary Volume 1 @ 2018 ICC All Rights Reserved.
Accessed by Kevin Taylor on 07/22/2020 pursuant to License Agreement with ICC. No further reproduction or distribution authorized. Any Unauthorized reproduction or distribution is a violation of the federal copyright, and subject to civil and criminal penalties thereunder.

Flood Damage-Resistant Materials Requirements

for Buildings Located in Special Flood Hazard Areas in accordance with the National Flood Insurance Program

Technical Bulletin 2 / August 2008

FEMA

Table of Contents

Introduction 1
NFIP Regulations 2
Required Use of Flood Damage-Resistant Materials 2
    Flood Damage-Resistant Material 2
    How Flood Damage-Resistant Materials Affect Flood Insurance Rates 3
Classification of Flood Damage-Resistant Materials 3
    Notes Regarding Classification of Materials 5
Fasteners and Connectors 12
Construction Examples 13
    Buildings in Zones A, AE, A1-A30, AR, AO, and AH 13
    Buildings in Zones V, VE, and V1-V30 14
Additional Uses of Flood Damage-Resistant Materials 14
    Accessory Structures 14
    Wet Floodproofing 15
    Buildings Outside of SFHAs 16
The NFIP 17
NFIP Technical Bulletins 17
Ordering Technical Bulletins 17
Further Information 18
Glossary 19

Revision to Table 2 footnote (*) made in October 2010.

Comments on the Technical Bulletins should be directed to:

Department of Homeland Security
FEMA Federal Insurance and Mitigation Administration
500 C Street, SW.
Washington, D.C. 20472

Technical Bulletin 2-08 replaces Technical Bulletin 2-93, *Flood-Resistant Materials Requirements for Buildings Located in Special Flood Hazard Areas in accordance with the National Flood Insurance Program*.

Introduction

Protecting buildings that are constructed in special flood hazard areas (SFHAs) from damage caused by flood forces is an important objective of the National Flood Insurance Program (NFIP). In support of this objective, the NFIP regulations include minimum building design criteria that apply to new construction, repair of substantially damaged buildings, and substantial improvement of existing buildings in SFHAs. The base flood is used to delineate SFHAs on Flood Insurance Rate Maps (FIRMs) prepared by the NFIP. The base flood is the flood that has a 1-percent chance of being equaled or exceeded in any given year (commonly called the "100-year" flood). Certain terms used in this Technical Bulletin are defined in the Glossary.

The NFIP regulations require the use of construction materials that are resistant to flood damage. The lowest floor of a residential building must be elevated to or above the base flood elevation (BFE), while the lowest floor of a non-residential building must be elevated to or above the BFE or dry floodproofed to the BFE.

All construction below the BFE is susceptible to flooding and must consist of flood damage-resistant building materials. The purpose of this Technical Bulletin is to provide current guidance on what constitute "materials resistant to flood damage" and how and when these materials must be used to improve a building's ability to withstand flooding.

Table 1 describes five classes of materials ranging from those that are highly resistant to floodwater damage, to those that have no resistance to flooding. Materials are broadly described as structural materials and finish materials based on how they are used in normal construction practices. Table 2 lists materials by generic names, and notes whether the materials are acceptable or unacceptable for use below the BFE. All building materials are in some way fastened or connected to the structure. Fasteners and connectors, as described in this Technical Bulletin, also must be resistant to flood damage.

Under the NFIP, the "lowest floor" is the floor of the lowest enclosed area of a building. An unfinished or flood-resistant enclosure that is used solely for parking of vehicles, building access, or storage is not the lowest floor, provided the enclosure is built in compliance with applicable requirements.

As used by the NFIP, an "enclosure" is an area that is enclosed on all sides by walls.

The NFIP defines a "basement" as any area that is below-grade on all sides. The regulations do not allow basements to extend below the BFE.

A brief description of the process used to identify or determine whether the materials listed are flood damage-resistant is provided, followed by some simplified examples with diagrams to illustrate the use of these materials below the BFE. Three additional circumstances where flood damage-resistant materials are used or recommended are described: accessory structures, limited use of wet floodproofing, and buildings outside of SFHAs.

Questions about use of flood damage-resistant materials should be directed to the appropriate local official, NFIP State Coordinating Office, or one of the Federal Emergency Management Agency's (FEMA's) Regional Offices.

NFIP Regulations

The NFIP regulations for flood damage-resistant materials are codified in Title 44 of the Code of Federal Regulations, in Section 60.3(a)(3), which states that a community shall:

> *"Review all permit applications to determine whether proposed building sites will be reasonably safe from flooding. If a proposed building site is in a floodprone area, all new construction and substantial improvements shall…(ii) be constructed with materials resistant to flood damage…"*

Proposals for substantial improvement of existing buildings in SFHAs, and proposals to repair those that have sustained substantial damage, must comply with the requirements for new construction. As part of issuing permits, community officials must review such proposals to determine whether they comply with the requirements, including the use of flood damage-resistant materials. Refer to the "Classification of Flood Damage-Resistant Materials" section of this Technical Bulletin for additional details. Further information on substantial improvement and substantial damage is found in *Answers to Questions About Substantially Damaged Buildings* (FEMA 213).

The NFIP Technical Bulletins provide guidance on the minimum requirements of the NFIP regulations. Community or State requirements that exceed those of the NFIP take precedence. Design professionals should contact the community to determine whether more restrictive provisions apply to the building or site in question. All other applicable requirements of the State or local building codes must also be met for buildings in all flood hazard areas.

Required Use of Flood Damage-Resistant Materials

Flood Damage-Resistant Material

"Flood [damage]-resistant material" is defined by the NFIP as "any building product [material, component or system] capable of withstanding direct and prolonged contact with floodwaters without sustaining significant damage." The term "prolonged contact" means at least 72 hours, and the term "significant damage" means any damage requiring more than cosmetic repair. "Cosmetic repair" includes cleaning, sanitizing, and resurfacing (e.g., sanding, repair of joints, repainting) of the material. The cost of cosmetic repair should also be less than the cost of replacement of affected materials and systems. In addition to these requirements, individual materials that are considered flood damage-resistant must not cause degradation of adjacent materials or the systems of which the material is a part.

The *International Building Code*® (IBC®), by reference to ASCE 24 *Flood Resistant Design and Construction*, and the *International Residential Code*® (IRC®), require the use of flood damage-resistant materials.

All building materials below the BFE must be flood damage-resistant, regardless of the expected or historic flood duration. For example, buildings in coastal areas that experience relatively short-duration flooding (generally, flooding with a duration of less than 24 hours) must be constructed with flood damage-resistant materials below the BFE. As noted in Table 2, **only Class 4 and Class 5 materials are acceptable for areas below the BFE in buildings in SFHAs**.

In some instances, materials that are not flood damage-resistant materials, such as wiring for fire alarms and emergency lighting, are allowed below the BFE if specifically required to address life safety and electric code requirements for building access and storage areas.

How Flood Damage-Resistant Materials Affect Flood Insurance Rates

Careful attention to compliance with the NFIP regulations for flood damage-resistant materials is important during design, plan review, construction, and inspection. Compliance influences both the building's vulnerability to flood damage and the cost of NFIP flood insurance. Flood insurance will not pay a claim for finish materials located in basements or in enclosed areas below the lowest floor of elevated buildings, even if such materials are considered to be flood damage-resistant. NFIP claims for damage below the BFE are limited to utilities and equipment, such as furnaces and water heaters.

Classification of Flood Damage-Resistant Materials

The information in this Technical Bulletin was initially developed based on information in the U.S. Army Corps of Engineers' *Flood Proofing Regulations* (1995), and has been updated based on additional information from FEMA-funded studies and reports, technical experts, and industry and trade groups. Table 1 classifies building materials according to their ability to resist flood damage.

Table 1. Class Descriptions of Materials

NFIP	Class	Class Description
ACCEPTABLE	5	Highly resistant to floodwater[1] damage, including damage caused by moving water.[2] These materials can survive wetting and drying and may be successfully cleaned after a flood to render them free of most harmful pollutants.[3] Materials in this class are permitted for partially enclosed or outside uses with essentially unmitigated flood exposure.
	4	Resistant to floodwater[1] damage from wetting and drying, but less durable when exposed to moving water.[2] These materials can survive wetting and drying and may be successfully cleaned after a flood to render them free of most harmful pollutants.[3] Materials in this class may be exposed to and/or submerged in floodwaters in interior spaces and do not require special waterproofing protection.
UNACCEPTABLE	3	Resistant to clean water[4] damage, but not floodwater damage. Materials in this class may be submerged in clean water during periods of flooding. These materials can survive wetting and drying, but may not be able to be successfully cleaned after floods to render them free of most[3] harmful pollutants.
	2	Not resistant to clean water[4] damage. Materials in this class are used in predominantly dry spaces that may be subject to occasional water vapor and/or slight seepage. These materials cannot survive the wetting and drying associated with floods.
	1	Not resistant to clean water[4] damage or moisture damage. Materials in this class are used in spaces with conditions of complete dryness. These materials cannot survive the wetting and drying associated with floods.

Notes:

1. Floodwater is assumed to be considered "black" water; black water contains pollutants such as sewage, chemicals, heavy metals, or other toxic substances that are potentially hazardous to humans.
2. Moving water is defined as water moving at low velocities of 5 feet per second (fps) or less. Water moving at velocities greater than 5 fps may cause structural damage to building materials.
3. Some materials can be successfully cleaned of most of the pollutants typically found in floodwater. However, some individual pollutants such as heating oil can be extremely difficult to remove from uncoated concrete. These materials are flood damage-resistant except when exposed to individual pollutants that cannot be successfully cleaned.
4. Clean water includes potable water as well as "gray" water; gray water is wastewater collected from normal uses (laundry, bathing, food preparation, etc.).

MODIFIED FROM: USACE 1995 *Flood Proofing Regulations*

Table 2 lists structural materials and finish materials commonly used in construction of floors, walls, and ceilings. For the purpose of this Technical Bulletin, structural materials and finish materials are defined as follows:

- **Structural materials** include all elements necessary to provide structural support, rigidity, and integrity to a building or building component. Structural materials include floor slabs, beams, subfloors, framing, and structural building components such as trusses, wall panels, I-joists and headers, and interior/exterior sheathing.

- **Finish materials** include all coverings, finishes, and elements that do not provide structural support or rigidity to a building or building component. Finish materials include floor coverings, wall and ceiling surface treatments, insulation, cabinets, doors, partitions, and windows.

Notes Regarding Classification of Materials

The classifications in Table 2 are based on the best information available at the time of publication. However, flood damage-resistance is determined by factors that may be a function of the specific application and by the characteristics of the floodwaters. Each situation requires sound judgment and knowledge of probable contaminants in local floodwaters to select materials that are required to resist flood damage. For materials and products that are listed in Table 2, manufacturers' use and installation instructions must be followed to ensure maximum performance. Masonry and wood products used below the BFE must comply with the applicable standards published by the American Society for Testing and Materials (ASTM), the American Concrete Institute (ACI), the Truss Plate Institute (TPI), the American Forest & Paper Association (AF&PA), and other appropriate organizations.

1. **Materials Not Listed:** Table 2 does not list all available structural materials and finish materials. For materials and products not listed, manufacturers' literature (i.e., specifications, materials safety data sheets, test reports) should be evaluated to determine if the product meets flood damage-resistance requirements. Materials and products that are not listed in Table 2 may be used if accepted by the local official. Acceptance should be based on sufficient evidence, provided by the applicant, that the materials proposed to be used below the BFE will resist flood damage without requiring more than cosmetic repair and cleaning.

2. **Unacceptable Materials:** Class 1, 2, and 3 materials are unacceptable for below-BFE applications for one or more of the following reasons:

   - Normal adhesives specified for above-grade use are water soluble or are not resistant to alkali or acid in water, including groundwater seepage and vapor.

   - The materials contain wood or paper products, or other materials that dissolve or deteriorate, lose structural integrity, or are adversely affected by water.

   - Sheet-type floor coverings (linoleum, rubber tile) or wall coverings (wallpaper) restrict drying of the materials they cover.

   - Materials are dimensionally unstable.

   - Materials absorb or retain excessive water after submergence.

3. **Impact of Material Combinations:** In some cases, the combination of acceptable structural and finish materials can negatively impact the classification of individual materials. This is illustrated by the following examples:

- Vinyl tile with chemical-set adhesives is an acceptable finish flooring material when placed on a concrete structural floor. However, when the same vinyl tile is applied over a plywood structural floor, it is no longer considered acceptable because the vinyl tile must be removed to allow the plywood to dry.

- Polyester-epoxy or oil-based paints are acceptable wall finishes when applied to a concrete structural wall. However, when the same paint is applied to a wood wall, it is no longer considered acceptable. Recent FEMA-supported studies by Oak Ridge National Laboratory have found that low-permeability paint can inhibit drying of the wood wall.

4. **Impact of Long-Duration Exposure and/or Contaminants:** The classifications of materials listed in Table 2 do not take into account the effects of long-duration exposure to floodwaters or contaminants carried by floodwaters. This is illustrated by the following examples:

   - Following Hurricane Katrina, FEMA deployed a Mitigation Assessment Team (MAT) to examine how building materials performed after long-duration exposure (2 to 3 weeks) to floodwaters (FEMA 549). The field survey revealed that some materials absorbed floodborne biological and chemical contaminants. However, it is not known at this time if a shorter duration flood event would have significantly altered the absorption rates of those contaminants.

   - Building owners, design professionals, and local officials should consider potential exposure to floodborne contaminants when selecting flood damage-resistant materials. For example, Table 2 lists cast-in-place concrete, concrete block, and solid structural wood (2x4s, etc.), as acceptable flood damage-resistant materials. However, experience has shown that buildings with those materials can be rendered unacceptable for habitation after being subjected to floodwaters with significant quantities of petroleum-based products such as home heating oil. Commonly used cleaning and remediation practices do not reduce the "off-gassing" of volatile hydrocarbons from embedded oil residues to acceptable levels that are established by the U.S. Environmental Protection Agency. Other materials, when exposed to these types of contaminants, may also not perform acceptably as flood damage-resistant materials.

Table 2. Types, Uses, and Classifications of Materials

Types of Building Materials	Uses of Building Materials		Classes of Building Materials				
			Acceptable		Unacceptable		
	Floors	Walls/ Ceilings	5	4	3	2	1
Structural Materials (floor slabs, beams, subfloors, framing, and interior/exterior sheathing)							
Asbestos-cement board		■	■				
Brick							
Face or glazed		■	■				
Common (clay)		■		■			
Cast stone (in waterproof mortar)		■	■				
Cement board/fiber-cement board		■	■				
Cement/latex, formed-in-place	■			■			
Clay tile, structural glazed		■	■				
Concrete, precast or cast-in-place	■	■	■				
Concrete block[1]		■	■				
Gypsum products							
Paper-faced gypsum board		■			■		
Non-paper-faced gypsum board		■		■			
Greenboard		■				■	
Keene's cement or plaster		■			■		
Plaster, otherwise, including acoustical		■				■	
Sheathing panels, exterior grade		■			■		
Water-resistant, fiber-reinforced gypsum exterior sheathing		■		■			
Hardboard (high-density fiberboard)							
Tempered, enamel or plastic coated		■				■	
All other types		■					■
Mineral fiberboard		■					■
Oriented-strand board (OSB)							
Exterior grade	■	■				■	
Edge swell-resistant OSB	■	■				■	
All other types	■	■					■
Particle board	■						■
Plywood							
Marine grade	■	■	■				
Preservative-treated, alkaline copper quaternary (ACQ) or copper azole (C-A)	■	■		■			

Table 2. Types, Uses, and Classifications of Materials (continued)

Types of Building Materials	Uses of Building Materials		Classes of Building Materials				
			Acceptable		Unacceptable		
	Floors	Walls/ Ceilings	5	4	3	2	1
Structural Materials (floor slabs, beams, subfloors, framing, and interior/exterior sheathing)							
Preservative-treated, Borate[2]	■	■	■				
Exterior grade/Exposure1 (WBP – weather and boil proof)	■	■		■			
All other types	■	■					■
Recycled plastic lumber (RPL)							
Commingled, with 80-90% polyethylene (PE)	■		■				
Fiber-reinforced, with glass fiber strands	■		■				
High-density polyethylene (HDPE), up to 95%	■		■				
Wood-filled, with 50% sawdust or wood fiber	■				■		
Stone							
Natural or artificial non-absorbent solid or veneer, waterproof grout	■	■	■				
All other applications		■				■	
Structural Building Components							
Floor trusses, wood, solid (2x4s), decay-resistant or preservative-treated	■	■		■			
Floor trusses, steel[3]	■		■				
Headers and beams, solid (2x4s) or plywood, exterior grade or preservative-treated		■		■			
Headers and beams, OSB, exterior grade or edge-swell resistant		■				■	
Headers and beams, steel[3]		■	■				
I-joists	■					■	
Wall panels, plywood, exterior grade or preservative-treated		■		■			
Wall panels, OSB, exterior grade or edge-swell resistant		■				■	
Wall panels, steel[3]		■		■			

Table 2. Types, Uses, and Classifications of Materials (continued)

Types of Building Materials	Uses of Building Materials		Classes of Building Materials				
			Acceptable		Unacceptable		
	Floors	Walls/ Ceilings	5	4	3	2	1
Structural Materials (floor slabs, beams, subfloors, framing, and interior/exterior sheathing)							
Wood							
Solid, standard, structural (2x4s)		■		■			
Solid, standard, finish/trim		■			■		
Solid, decay-resistant[4]	■	■	■				
Solid, preservative-treated, ACQ or C-A		■		■			
Solid, preservative-treated, Borate[2]		■		■			
Finish Materials (floor coverings, wall and ceiling finishes, insulation, cabinets, doors, partitions, and windows)							
Asphalt tile[5]							
With asphaltic adhesives	■				■		
All other types	■						■
Cabinets, built-in							
Wood		■				■	
Particle board		■					■
Metal[3]		■		■			
Carpeting	■						■
Ceramic and porcelain tile							
With mortar set	■	■		■			
With organic adhesives	■	■				■	
Concrete tile, with mortar set	■		■				
Corkboard		■				■	
Doors							
Wood, hollow		■				■	
Wood, lightweight panel construction		■				■	
Wood, solid		■				■	
Metal, hollow[3]		■		■			
Metal, wood core[3]		■		■			
Metal, foam-filled core[3]		■		■			
Fiberglass, wood core		■		■			
Epoxy, formed-in-place	■		■				

Table 2. Types, Uses, and Classifications of Materials (continued)

Types of Building Materials	Uses of Building Materials		Classes of Building Materials				
			Acceptable		Unacceptable		
	Floors	Walls/ Ceilings	5	4	3	2	1
Finish Materials (floor coverings, wall and ceiling finishes, insulation, cabinets, doors, partitions, and windows)							
Glass (sheets, colored tiles, panels)		■		■			
Glass blocks		■	■				
Insulation							
Sprayed polyurethane foam (SPUF) or closed-cell plastic foams	■	■	■				
Inorganic – fiberglass, mineral wool: batts, blankets, or blown	■	■			■		
All other types (cellulose, cotton, open-cell plastic foams, etc.)	■	■				■	
Linoleum	■						■
Magnesite (magnesium oxychloride)	■						■
Mastic felt-base floor covering	■						■
Mastic flooring, formed-in-place	■		■				
Metals, non-ferrous (aluminum, copper, or zinc tiles)		■			■		
Metals							
Non-ferrous (aluminum, copper, or zinc tiles)		■			■		
Metals, ferrous[3]		■		■			
Paint							
Polyester-epoxy and other oil-based waterproof types		■		■			
Latex		■		■			
Partitions, folding							
Wood		■				■	
Metal[3]		■		■			
Fabric-covered		■					■
Partitions, stationary (free-standing)							
Wood frame		■		■			
Metal[3]		■		■			
Glass, unreinforced		■		■			
Glass, reinforced		■		■			
Gypsum, solid or block		■					■

Table 2. Types, Uses, and Classifications of Materials (continued)

Types of Building Materials	Uses of Building Materials		Classes of Building Materials				
			Acceptable		Unacceptable		
	Floors	Walls/ Ceilings	5	4	3	2	1
Finish Materials (floor coverings, wall and ceiling finishes, insulation, cabinets, doors, partitions, and windows)							
Polyurethane, formed-in-place	■		■				
Polyvinyl acetate (PVA) emulsion cement	■						■
Rubber							
Moldings and trim with epoxy polyamide adhesive or latex-hydraulic cement		■		■			
All other applications		■					■
Rubber sheets or tiles[5]							
With chemical-set adhesives[6]	■		■				
All other applications	■						■
Silicone floor, formed-in-place	■		■				
Steel (panels, trim, tile)							
With waterproof adhesives[3]		■	■				
With non-waterproof adhesives		■				■	
Terrazo	■			■			
Vinyl asbestos tile (semi-flexible vinyl)[5]							
With asphaltic adhesives	■		■				
All other applications	■						■
Vinyl sheets or tiles (coated on cork or wood product backings)	■						■
Vinyl sheets or tiles (homogeneous)[5]							
With chemical-set adhesives[6]	■			■			
All other applications	■						■
Wall coverings							
Paper, burlap, cloth types		■					■
Vinyl, plastic, wall paper		■					■
Wood floor coverings							
Wood (solid)	■						■
Engineered wood flooring	■					■	
Plastic laminate flooring	■					■	
Wood composition blocks, laid in cement mortar	■					■	
Wood composition blocks, dipped and laid in hot pitch or bitumen	■					■	

Notes*:

1 Unfilled concrete block cells can create a reservoir that can hold water following a flood, which can make the blocks difficult or impossible to clean if the floodwaters are contaminated.

2 Borate preservative-treated wood meets the NFIP requirements for flood damge-resistantce; however, the borate can leach out of the wood if the material is continuously exposed to standing or moving water.

3 Not recommended in areas subject to salt-water flooding.

4 Examples of decay-resistant lumber include heart wood of redwood, cedar, and black locust. Refer to Section 2302 of the International Building Code® (IBC®) and Section R202 of the International Residential Code® (IRC®) for guidance.

5 Using normally specified suspended flooring (i.e., above-grade) adhesives, including sulfite liquor (lignin or "linoleum paste"), rubber/asphaltic dispersions, or "alcohol" type resinous adhesives (culmar, oleoresin).

6 Examples include epoxy-polyamide adhesives or latex-hydraulic cement.

* In addition to the requirements of TB 2 for flood damage resistance, building materials must also comply with any additional requirements of applicable building codes. For example, for wood products such as solid 2x4s and plywood, applicable building code requirements typically include protection against decay and termites and will specify use of preservative-treated or decay-resistant wood for certain applications. Applications that require preservative-treated or decay-resistant species include wood in contact with the ground, wood exposed to weather, wood on exterior foundation walls, or wood members close to the exposed ground. In some cases, applicable building code requirements (such as those in ASCE 24-05 and IRC 2006) do not reflect updated guidance in TB 2 and specify that all wood used below the design flood elevation be preservative-treated or naturally decay-resistant regardless of proximity to ground or exposure to weather. (Revision made in October 2010)

Fasteners and Connectors

The term “fasteners” typically refers to nails, screws, bolts, and anchors. The term “connectors” typically refers to manufactured devices used to connect two or more building components. Joist hangers, post bases, hurricane ties and clips, and mud-sill anchors are examples of connectors. Fasteners and connectors are materials and thus must be made of flood damage-resistant materials in order to comply with the NFIP requirements.

Specifications for fasteners and connectors used in buildings in SFHAs are in ASCE 24, a standard referenced by the IBC. Chapter 23 of the IBC has specific requirements for connections and fasteners used with wood, including preservative-treated wood. Similar specifications are in Chapter 3 of the IRC.

Table 2 does not specifically address fasteners and connectors. However, it is clear that the performance of buildings that are exposed to flooding is, at least in part, a function of the fasteners and connectors used to put the components together. When preservative-treated woods are used, particular attention is required for fasteners and connectors because some treatments are more corrosive than others, which could shorten the service life of the fasteners and connectors. For example, alkaline copper quaternary (ACQ) treatments are more corrosive than traditional acid copper chromate (ACC) treatments. If corrosion occurs, buildings are less likely to withstand flood loads and other loads. Fasteners and connectors made of stainless steel, hot-dipped zinc-coated galvanized steel, silicon bronze, or copper are recommended for use with preservative-treated wood.

This Technical Bulletin, consistent with ASCE 24 and the International Code Series, recommends that stainless steel or hot-dip galvanized fasteners and connectors be used below the BFE in both inland (noncorrosive) and coastal (corrosive) areas. In coastal environments where airborne salts contribute to corrosion, it is recommended that corrosion-resistant fasteners and connectors be used throughout the building where they may be exposed. For

additional guidance, see Technical Bulletin 8, *Corrosion Protection for Metal Connectors in Coastal Areas.* Also see TPI/WTCA *Guidelines for Use of Alternative Preservative Treatments with Metal Connector Plates* for further guidance on metal plate connected wood trusses manufactured with preservative treated lumber (http://www.sbcindustry.com/images/PTWGuidelines.pdf).

Construction Examples

Buildings in Zones A, AE, A1-A30, AR, AO, and AH

Figure 1 illustrates a solid foundation wall (crawlspace) elevated to meet the minimum requirement that the lowest floor be at the BFE. Figure 2 illustrates framed walls that may be used for enclosures below the BFE that are used for parking of vehicles, building access, and storage.

To maximize allowable use of enclosures below the BFE, it is a common practice to extend the foundation a full story, even though that puts the lowest floor well above the BFE. In such cases, while the NFIP requirement is that flood damage-resistant materials be used only below the BFE, it is strongly recommended that such materials be used for all construction below the lowest floor. This will reduce flood damage to the enclosed area in the event flooding exceeds the BFE. For additional guidance on enclosures in A zones, see Technical Bulletin 1, *Openings in Foundation Walls and Walls of Enclosures Below Elevated Buildings in Special Flood Hazard Areas.*

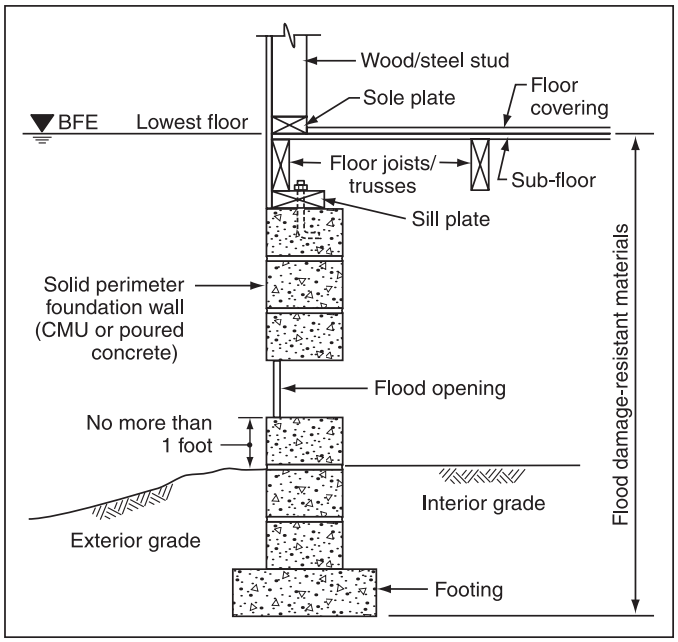

Figure 1. Building elevated on solid foundation walls meeting the minimum NFIP requirements for Zones A, AE, A1-A30, AR, AO, and AH

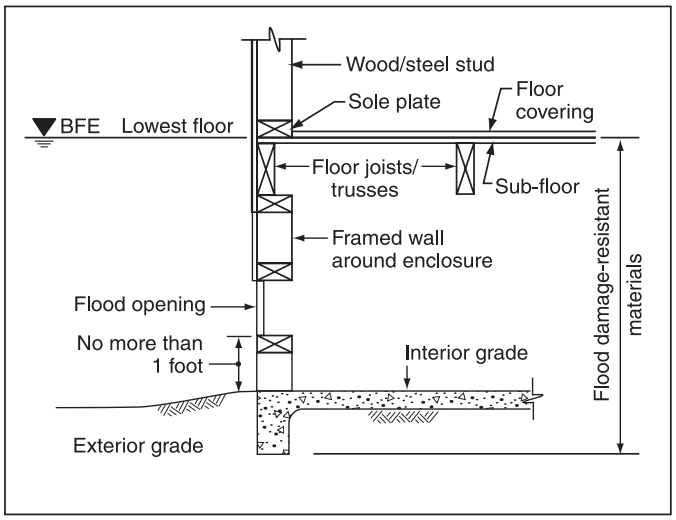

Figure 2. Framed enclosure under building elevated in accordance with NFIP requirements for Zones A, AE, A1-A30, AO, and AH

Buildings in Zones V, VE, and V1-V30

The NFIP regulations require that the bottom of the lowest horizontal structural member of the lowest floor (usually the floor beam or girder) of buildings in Zones V, VE, and Vl-V30 be at or above the BFE. Therefore, all materials below the bottom of those members must be flood damage-resistant materials. This requirement applies to lattice work and screening, and also to materials used to construct breakaway walls that enclose areas below the lowest floor. Depending on the design parameters selected, breakaway walls may remain in place during low-level floods and must be flood damage-resistant so that they can be readily cleaned and not deteriorate over time due to wetting. Figure 3 illustrates the requirement. For additional guidance on breakaway walls used to enclose areas under buildings in V zones, see Technical Bulletin 9, *Design and Construction Guidance for Breakaway Walls Below Elevated Coastal Buildings.*

Additional Uses of Flood Damage-Resistant Materials

Accessory Structures

Accessory structures may be allowed in SFHAs provided they are located, installed, and constructed in ways that comply with NFIP requirements. Some communities allow accessory structures that are limited to the uses specified for enclosures below the BFE: parking of vehicles and storage. As with other buildings, accessory structures below the BFE are required to be constructed with flood damage-resistant materials. In addition, accessory structures must be anchored to resist flotation, collapse, and lateral movement and comply with other requirements based on the flood zone. For additional information and requirements, contact the appropriate community permitting office.

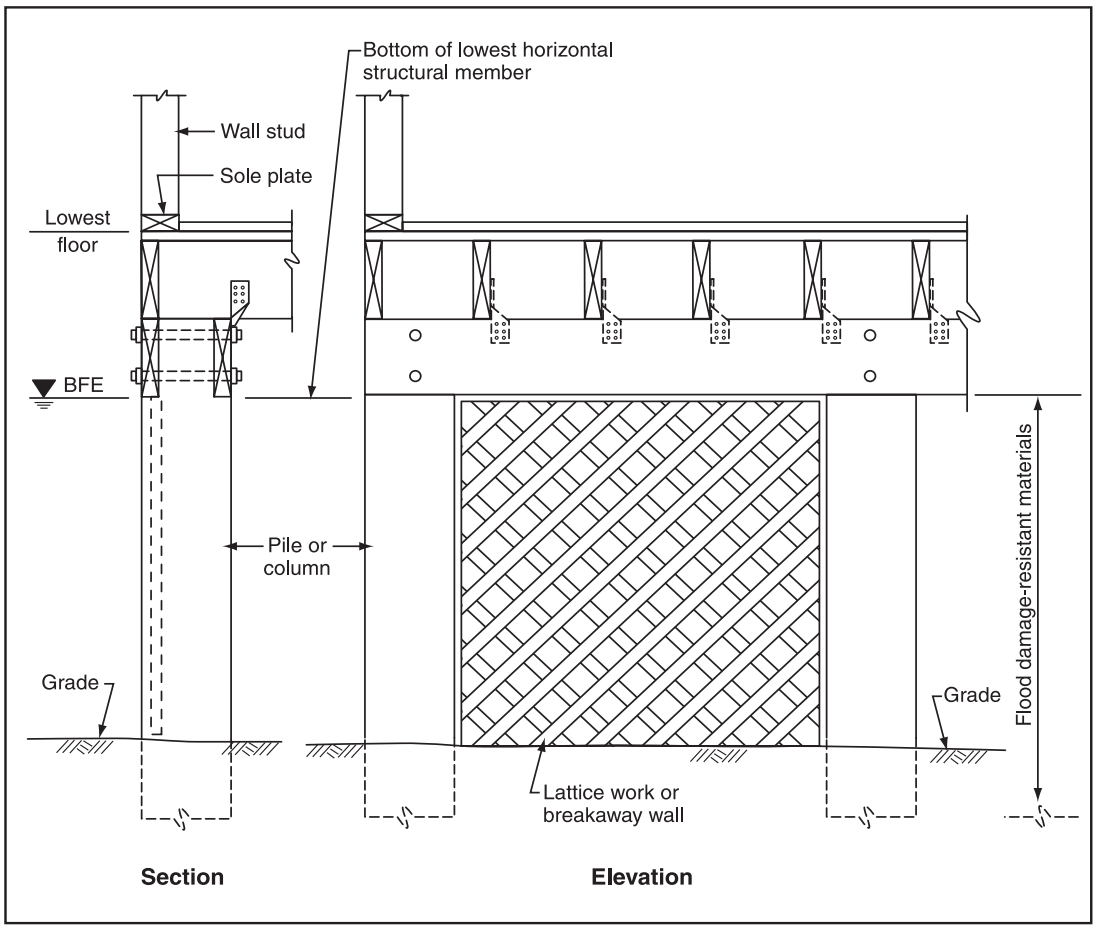

Figure 3. Flood damage-resistant building material requirements for buildings elevated in accordance with NFIP requirements for Zones V, VE, and V1-V30

Wet Floodproofing

Wet floodproofing is a method to reduce damage that typically involves three elements: allowing floodwaters to enter and exit to minimize structural damage, using flood damage-resistant materials, and elevating utility service and equipment. When a building is retrofitted to be wet floodproofed, non-flood damage-resistant materials that are below the BFE should be removed and replaced with flood damage-resistant materials. This will reduce the costs of repair and facilitate faster recovery.

Wet floodproofing is not allowed in lieu of complying with the lowest floor elevation requirements for new residential buildings (or dry floodproofing of nonresidential buildings in A zones). The exception is accessory structures, as noted on the previous page. Wet floodproofing may also be used to voluntarily retrofit buildings that are older than the date of the community's first FIRM (commonly referred to as "pre-FIRM"), provided the requirement to

bring such buildings into compliance is not triggered (called "substantial improvement"). Figure 4 illustrates some suggested retrofitting of interior walls in a pre-FIRM building. However, please note that the techniques illustrated in Figure 4 cannot be used to bring a substantially damaged or substantially improved building into compliance with the NFIP. For additional information on wet floodproofing, see Technical Bulletin 7, *Wet Floodproofing Requirements*.

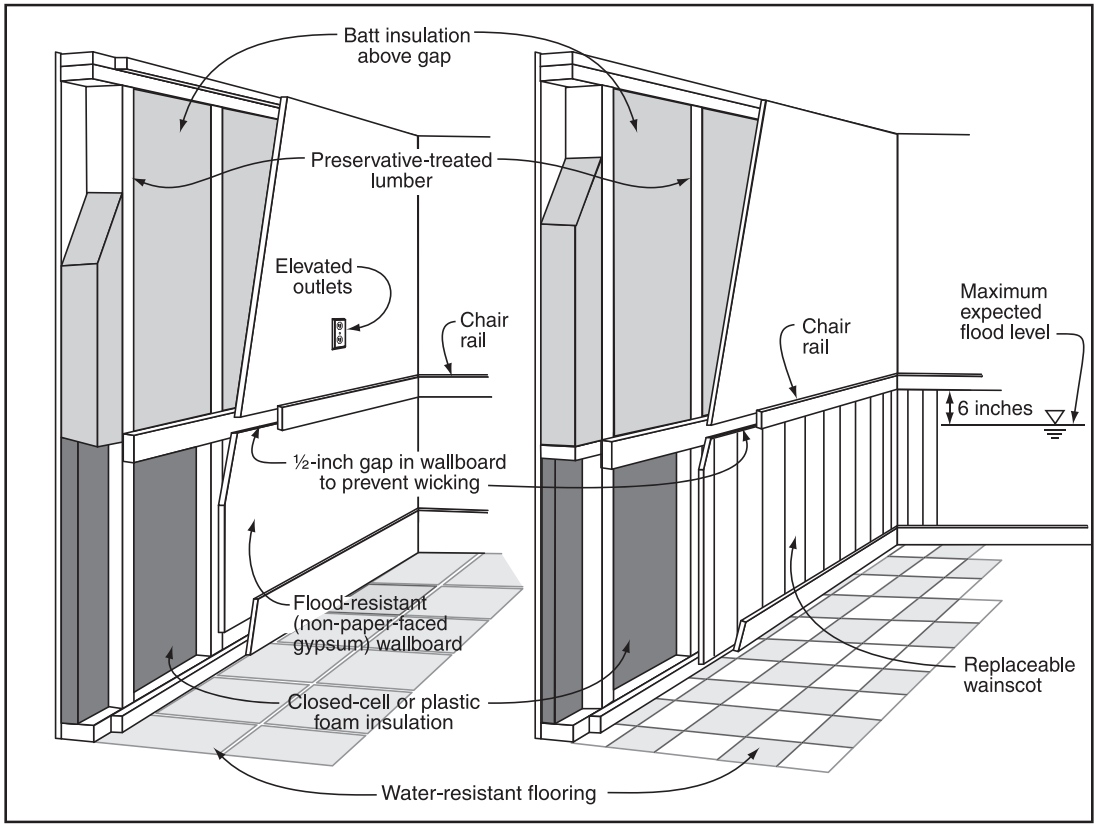

Figure 4. Partial wet floodproofing technique using flood damage-resistant materials for finished wall construction.

Buildings Outside of SFHAs

FEMA reports that up to 25 percent of NFIP flood insurance claims are paid on buildings that are outside of the mapped SFHA. This occurs for many reasons, including out-of-date maps and local drainage problems. In areas known to be prone to flooding that are not subject to the NFIP requirements, it is recommended that flood damage-resistant materials be used for construction of new buildings and for repair or renovation of existing buildings. Figure 4 illustrates some options.

The NFIP

The U.S. Congress established the NFIP with the passage of the National Flood Insurance Act of 1968. The NFIP is a Federal program enabling property owners in participating communities to purchase insurance as protection against flood losses, in exchange for State and community floodplain management regulations that reduce future flood damages. Participation in the NFIP is based on an agreement between communities and the Federal Government. If a community adopts and enforces adequate floodplain management regulations, FEMA will make flood insurance available within the community.

Title 44 of the U.S. Code of Federal Regulations contains the NFIP criteria for floodplain management, including design and construction standards for new and substantially improved buildings located in SFHAs identified on the NFIP's FIRMs. FEMA encourages communities to adopt floodplain management regulations that exceed the NFIP criteria. As an insurance alternative to disaster assistance, the NFIP reduces the escalating costs of repairing damage to buildings and their contents caused by floods.

NFIP Technical Bulletins

This is one of a series of Technical Bulletins that FEMA has produced to provide guidance concerning the building performance requirements of the NFIP. These requirements are contained in Title 44 of the U.S. Code of Federal Regulations at Section 60.3. The bulletins are intended for use by State and local officials responsible for interpreting and enforcing the requirements in their floodplain management regulations and building codes, and by members of the development community, such as design professionals and builders. New bulletins, as well as updates of existing bulletins, are issued periodically, as necessary. The bulletins do not create regulations; rather, they provide specific guidance for complying with the requirements of existing NFIP regulations. Users of the Technical Bulletins who need additional guidance should contact their NFIP State Coordinator or the appropriate FEMA regional office. *The User's Guide to Technical Bulletins* (http://www.fema.gov/pdf/fima/guide01.pdf) lists the bulletins issued to date.

Ordering Technical Bulletins

The quickest and easiest way to acquire copies of FEMA's Technical Bulletins is to download them from the FEMA website (http://www.fema.gov/plan/prevent/floodplain/techbul.shtm).

Technical Bulletins also may be ordered free of charge from the FEMA Distribution Center by calling 1-800-480-2520, or by faxing a request to 1-240-699-0525, Monday through Friday between 8 a.m. and 5 p.m. EST. Please provide the FEMA publication number, title, and quantity of each publication requested, along with your name, address, zip code, and daytime telephone number. Written requests may be submitted by email to: FEMA-Publications-Warehouse@dhs.gov

Further Information

The following publications provide further information concerning the use of flood damage-resistant materials.

Algan, H. and Wendt, R. 2005. *Pre-Standard Development for the Testing of Flood-Damage-Resistant Residential Envelope Systems, Comparison of Field and Laboratory Results - Summary Report*, Oak Ridge National Laboratory, June 2005.

American Red Cross, FEMA. 1992. *Repairing Your Flooded Home*, FEMA 232, ARC 4477.

American Society of Civil Engineers, Structural Engineering Institute. 2005. *Flood Resistant Design and Construction*, ASCE/SEI 24-05.

American Society of Civil Engineers, Structural Engineering Institute. 2005. *Minimum Design Loads for Buildings and Other Structures*, ASCE/SEI 7-05.

Brick Institute of America, n.d. *Technical Notes for Brick Construction*, Brick Institute of America, McLean, Virginia.

California Integrated Waste Management Board. 2004. "Recycled Plastic Lumber," California Integrated Waste Management Board, web page, last updated June 22, 2004 (http://www.ciwmb.ca.gov/Plastic/Recycled/Lumber).

Department of Energy. 2005. *Energy-Efficient Flood-Damage-Resistant Home Reconstruction*, (http://www.ornl.gov/sci/res_buildings/FEMA-attachments/Flood_damage-reconstruction.pdf).

FEMA. 1991. *Answers to Questions About Substantially Damaged Buildings*, FEMA 213.

FEMA. 1993. *Wet Floodproofing Requirements*, Technical Bulletin 7-93, FIA-TB-7.

FEMA. 1996. *Corrosion Protection for Metal Connectors in Coastal Areas*, Technical Bulletin 8-96, FIA-TB-8.

FEMA. 2000. *Coastal Construction Manual*, FEMA 55CD (3rd edition).

FEMA. 2005. *Home Builder's Guide to Coastal Construction: Technical Fact Sheet Series*, FEMA 499.

FEMA. 2006. *Mitigation Assessment Team Report: Hurricane Katrina in the Gulf Coast*, FEMA 549.

FEMA. 2007. *National Flood Insurance Program: Flood Insurance Manual*, Revised October 2007.

International Code Council, Inc. 2006. International Building Code®, IBC® 2006.

International Code Council, Inc. 2006. International Residential Code®, IRC® 2006.

Simpson Strong-Tie. 2008. *Technical Bulletin: Preservative-Treated Wood*, Simpson Strong-Tie T-PTWOOD08-R, July 2008 (http://www.strongtie.com/ftp/bulletins/T-PTWOOD08-R.pdf).

TPI/WTCA. 2004. TPI/WTCA *Guidelines for Use of Alternative Preservative Treatments with Metal Connector Plates*, updated June 4, 2007, (http://www.sbcindustry.com/images/PTWGuidelines.pdf).

U.S. Army Corps of Engineers. 1984. *Flood Proofing Systems and Techniques*, U.S. Army Corps of Engineers, December 1984.

U.S. Army Corps of Engineers. 1995. *Flood Proofing Regulations*, Chapters 9 and 10, U.S. Army Corps of Engineers, EP 1165-2-314.

Wood Truss Council of America (WTCA). 2005. *The Load Guide: Guide to Good Practice for Specifying and Applying Loads to Structural Building Components*, (http://www.sbcindustry.com/loads.php).

World Floor Covering Association (WFCA). n.d., Anaheim, California (http://www.wfca.org/index.html).

Glossary

Accessory structure — A structure that is on the same parcel of property as a principal structure, the use of which is incidental to the use of the principal structure.

Base flood — The flood having a 1-percent chance of being equaled or exceeded in any given year, commonly referred to as the "100-year flood." The base flood is the national standard used by the NFIP and all Federal agencies for the purposes of requiring the purchase of flood insurance and regulating new development.

Base flood elevation (BFE) — The height of the base (1-percent annual chance or 100-year) flood in relation to a specified datum, usually the National Geodetic Vertical Datum of 1929, or the North American Vertical Datum of 1988.

Basement — Any area of a building having its floor subgrade (below ground level) on all sides.

Enclosure or enclosed area — Areas created by a crawlspace or solid walls that fully enclose areas below the BFE.

Federal Emergency Management Agency (FEMA) — The Federal agency that, in addition to carrying out other activities, administers the National Flood Insurance Program.

Federal Insurance and Mitigation Administration (FIMA) — The component of FEMA directly responsible for administering the flood hazard identification and floodplain management aspects of the NFIP.

Flood Insurance Rate Map (FIRM) — The official map of a community on which FEMA has delineated both the special flood hazard areas (SFHAs) and the risk premium zones applicable to the community.

Floodprone area — Any land area susceptible to being inundated by floodwater from any source.

Lowest floor — The lowest floor of the lowest enclosed area of a building, including a basement. Any NFIP-compliant unfinished or flood-resistant enclosure usable solely for parking of vehicles, building access, or storage (in an area other than a basement) is not considered a building's lowest floor, provided the enclosure does not render the structure in violation of the applicable design requirements of the NFIP.

Registered Design Professional — An individual who is registered or licensed to practice their respective design profession as defined by the statutory requirements of the professional registration laws of the State or jurisdiction in which the project is to be constructed.

Special Flood Hazard Area (SFHA) — An area delineated on a FIRM as being subject to inundation by the base flood and designated as Zone A, AE, A1-A30, AR, AO, AH, A99, V, VE, or V1-V30.

Substantial damage — Damage of any origin sustained by a structure whereby the cost of restoring the structure to its before-damaged condition would equal or exceed 50 percent of the market value of the structure before the damage occurred. Structures that are determined to be substantially damaged are considered to be substantial improvements, regardless of the actual repair work performed.

Substantial improvement — Any reconstruction, rehabilitation, addition, or other improvement of a structure, the cost of which equals or exceeds 50 percent of the market value of the structure (or smaller percentage if established by the community) before the "start of construction" of the improvement. This term includes structures that have incurred "substantial damage," regardless of the actual repair work performed.

Environmental Review requirements

3 possible procedures for reviewing environmental conditions prior to development.

Option 1

Require a phase 1 study be submitted by the applicant for review by an environmental consultant for all commercial new and redevelopment which disturbs soil on the property.

Option 2

Hire an environmental engineer to do a study of the entire city of Bellaire identifying all at risk properties within the city. The properties which are identified as at risk will Require a phase 1 study be submitted by the applicant for review by an environmental consultant prior to any new or redevelopment of the property.

Option 3

Require a signed affidavit be submitted by the applicant stating that an environmental assessment has been performed verifying that all environmental risk have been or will be remediated. This affidavit would be submitted as an attachment to the SWPPP.